Universal Camera

4K PTZ Camera

User Manual

（V1.0）

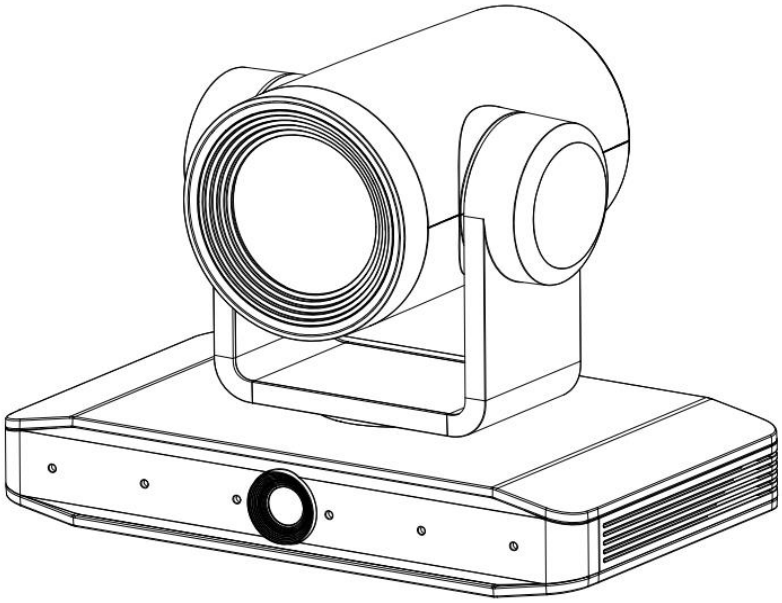

Preface

This manual is to ensure that the user can use the product properly and avoid danger while operating. Before using this product, please read the user manual carefully and keep it properly for future reference

Overview

This manual is about 4K PTZ camera operation

Graphic Symbols

Description of graphic symbols used in this manual

Symbols	Description
illustration	This symbol indicates that the words are clarification or supplement to this article.
Caution	This symbol indicates that negligence of the instructions may lead to mishandling that may cause injury or property damage.
Danger	This symbol indicates a risk that may result in damage to this machine or documents. Follow the instructions to avoid property damage.

Attention

This manual introduces functions, installations and operations for this product in details. Please read this manual carefully before installation and use.

Precautions:

This product can only be used in the specified conditions in order to avoid any damage to the camera:

1) Do not expose the product to rain or moisture.
2) To prevent the risk of electric shock, do not open the case. Installation and maintenance should only be carried out by qualified technicians.
3) Do not use the product beyond the specified temperature, humidity or power supply specifications.
4) Please use a soft dry cloth to clean the camera. If the camera is very dirty, clean it with diluted neutral detergent; do not use any type of solvents, which may damage the surface.

Electrical Safety:

Installation and use of this product must strictly comply with local electrical safety standards.

Transportation:

Avoid any stress, vibration, or moisture during transportation, storage, installation and operation

Installation:

1) Do not rotate the camera head violently, otherwise it may cause mechanical failure;
2) This product should be placed on a stable desktop or other horizontal surface. Do not install the product obliquely, otherwise it may display inclined image;
3) Ensure there are no obstacles within rotation range of the holder.
4) Do not power on before completely installation.

Do Not Dismantle Camera：

We are not responsible for any unauthorized modification or dismantling.

Magnetic Interference

Electromagnetic fields at specific frequencies may affect the video image. This product is Class A. It may cause radio interference in household application. Appropriate measure is required.

Content

1. Quick Start 1
1.1 Interface 1
1.2 Power-on Self-Test 1
1.2.1 Power on 1
1.2.2 Self-Test 2
1.3 Video Output 2
1.3.1 Network Output 2
1.3.2 HDMI Output 2
1.3.3 USB3.0 Output 2
1.4 Bracket 3
1.4.1 Steps of Wall Mount 3
1.4.2 Steps of Ceiling Mount 4
2. Product Overview 6
2.1 Product Overview 6
2.1.1 Product Dimension 6
2.1.2 Accessory 6
2.2 Product Feature 7
2.3 Technical Specification 8
2.4 Interface Introduction 12
2.4.1 Interface Diagram 12
2.4.2 RS-232 13
3. How to Use 16
3.1 Video Output 16
3.1.1 Power-on Self-test 16
3.1.2 Video Output 16
3.2 Remote Control 16
3.2.1 IR Remote Control 18
3.2.2 Remote Control Usage 20
3.3 Menu Setting 22

3.3.1 Main Menu 22
3.3.2 Tracking Setting 23
3.3.3 System Setting 23
3.3.4 Camera Parameter Setting 24
3.3.5 P/T/Z 27
3.3.6 Video Format 28
3.3.7 Version 29
3.3.8 Restore Default 29
4. NETWORK CONNECTION 30
4.1 Connection Method 30
4.2 Camera Web Interface 32
4.2.1 Web Login 32
4.2.2 Preview 32
4.2.3 Configuration 33
4.2.4 Video Configuration 33
4.2.5 Network Configuration 37
4.2.6 System Configuration 39
4.2.7 Logout 41
4.2.8 Tracking Function Configuration 41
5. Serial Port Communication Control 43
5.1 VISCA Protocol List 43
5.1.1 VISCA Protocol List 43
5.1.2 Camera Control Command 44
5.1.3 Inquiry Command 51
5.2 Pelco-D Protocol Command List 56
5.3 Pelco-P Protcol Command List 58
6. Maintenance and Troubleshooting 61
6.1 Camera Maintenance 61
6.2 Unqualified Applications 61
6.3 Troubleshooting 61

1. Quick Start

1.1 Interface

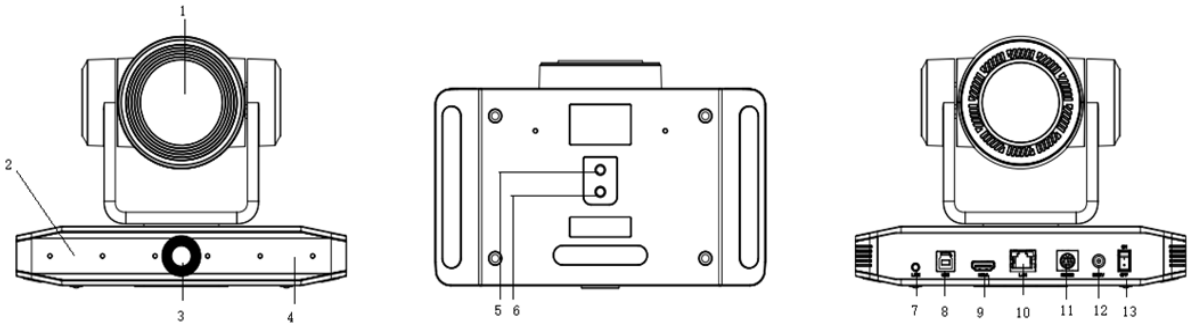

Figure1-1 Interface

Product Interface：

1. Close-up Lens	7. Audio IN（LINE-IN）	13. Power Switch
2. Camera Base	8. USB3.0	
3. Panoramic Lens	9. HDMI Output	
4. Remote Control Receiving Light	10. LAN Port	
5. Screw Hole for Tripod	11. RS232 Input	
6. Position Hole for Tripod	12. Power Input Socket	

When using the camera, please put the plastic pad on the center bottom of device

1.2 Power-on Self-Test

1.2.1 Power on

Connect device to power socket with DC12V power adapter.

1.2.2 Self-Test

After power on, the receiver light will start flashing and camera will do a brief pan-tilt tour and return to the home position. When light stop flashing, the self-test is finished.

Caution

- Default address of the remote control is 1#. When menu restore default setting, the address of IP remote control will restore 1#.
- If preset 0 is set, the camera will return to the preset 0 position after self-test

1.3 Video Output

This series camera can output video through network, HDMI, and USB3.0.

1.3.1 Network Output

a, Network connection: Shown as diagram 1.1 #10

b, Log in: You can reach the Web Interface by typing in the camera's IP address(default 192.168.5.163) into a web browser. To log in, type in "admin" into the username and password fields. From the Web Interface, you can adjust many of your camera's settings via this IP interface, like PTZ control, video recording, playback, and configuration setting.

1.3.2 HDMI Output

a, HDMI connection: Shown as diagram 1.1 #8

b, Connect camera to the display device via HDMI cable.

1.3.3 USB3.0 Output

USB3.0 connection: Shown as diagram 1.1 #8. Open video software and select image device to output video.

1.4 Bracket

Caution

- Bracket can only be wall mounted or upside down mounted on template and concrete wall, but can not be installed on plasterboard.

1.4.1 Steps of Wall Mount

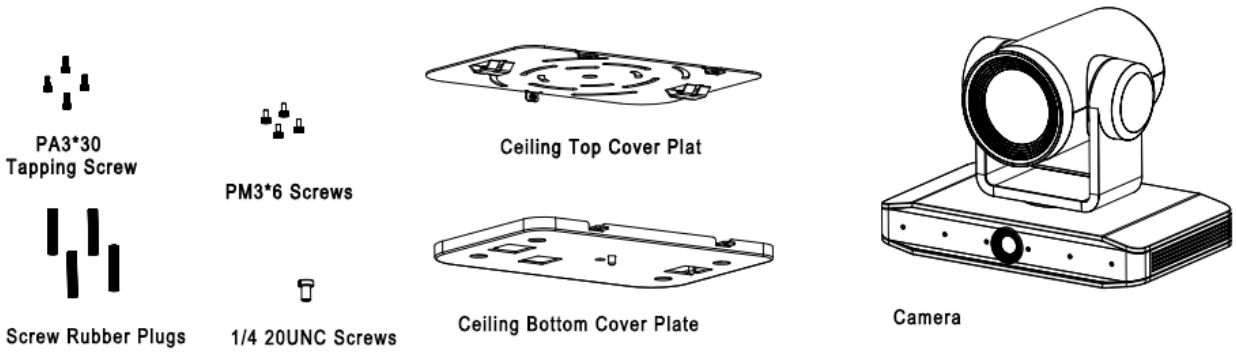

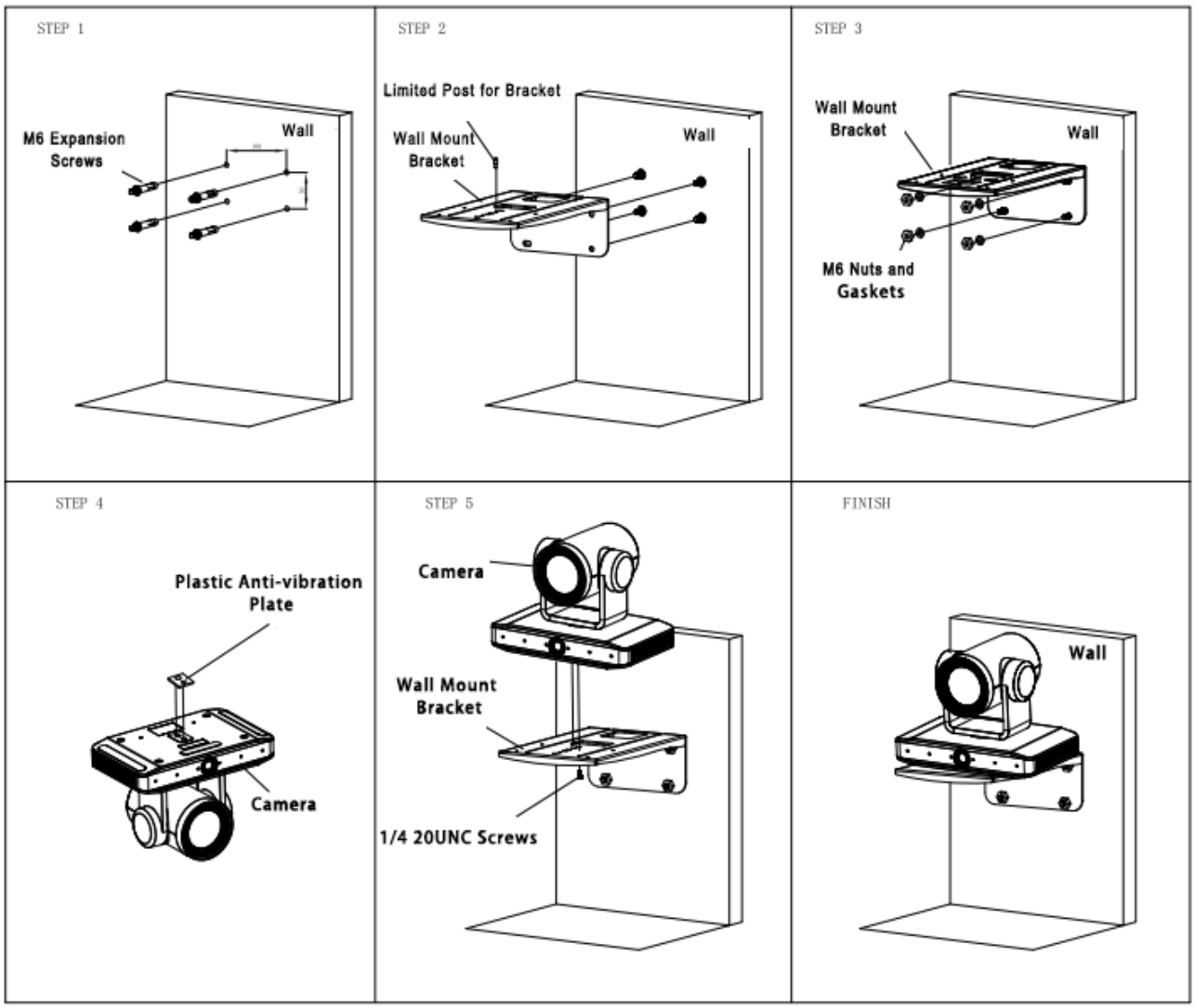

Figure1-2 Steps of Wall Mount

1.4.2 Steps of Ceiling Mount

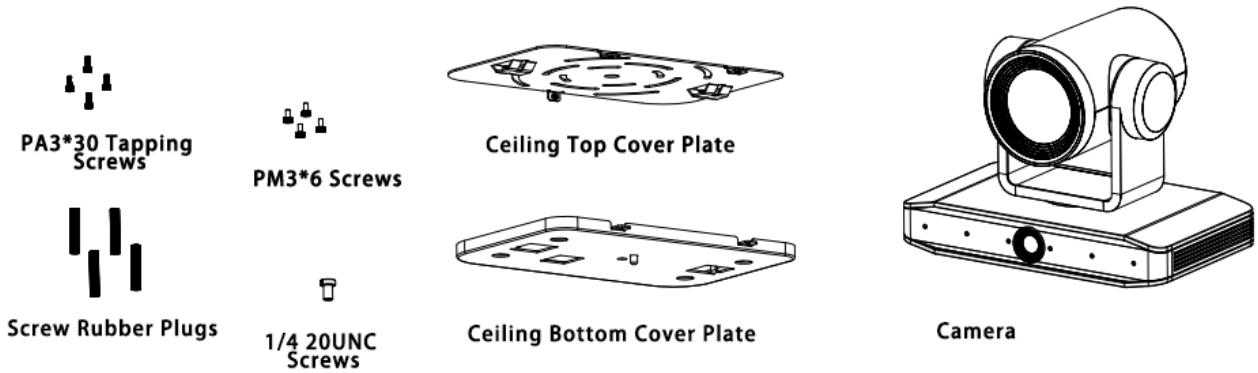

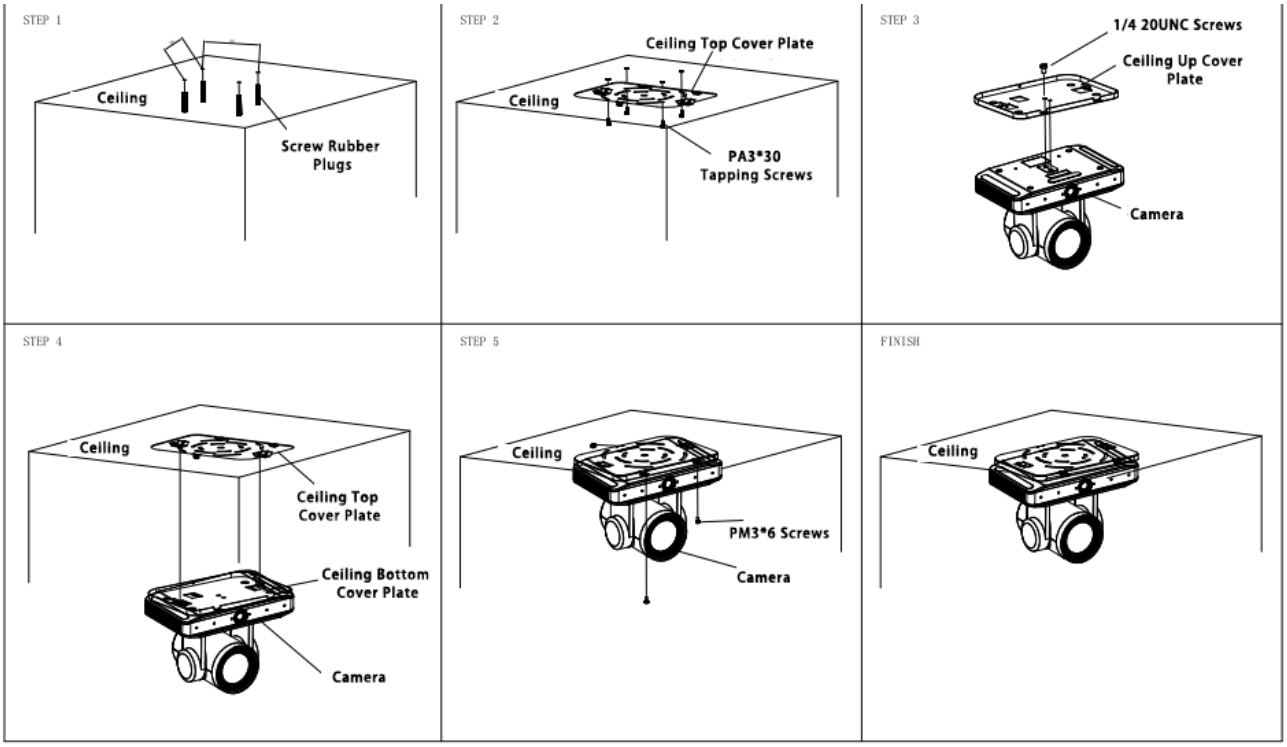

Figure1-3 Steps of Ceiling Mount

2. Product Overview

2.1 Product Overview

2.1.1 Product Dimension

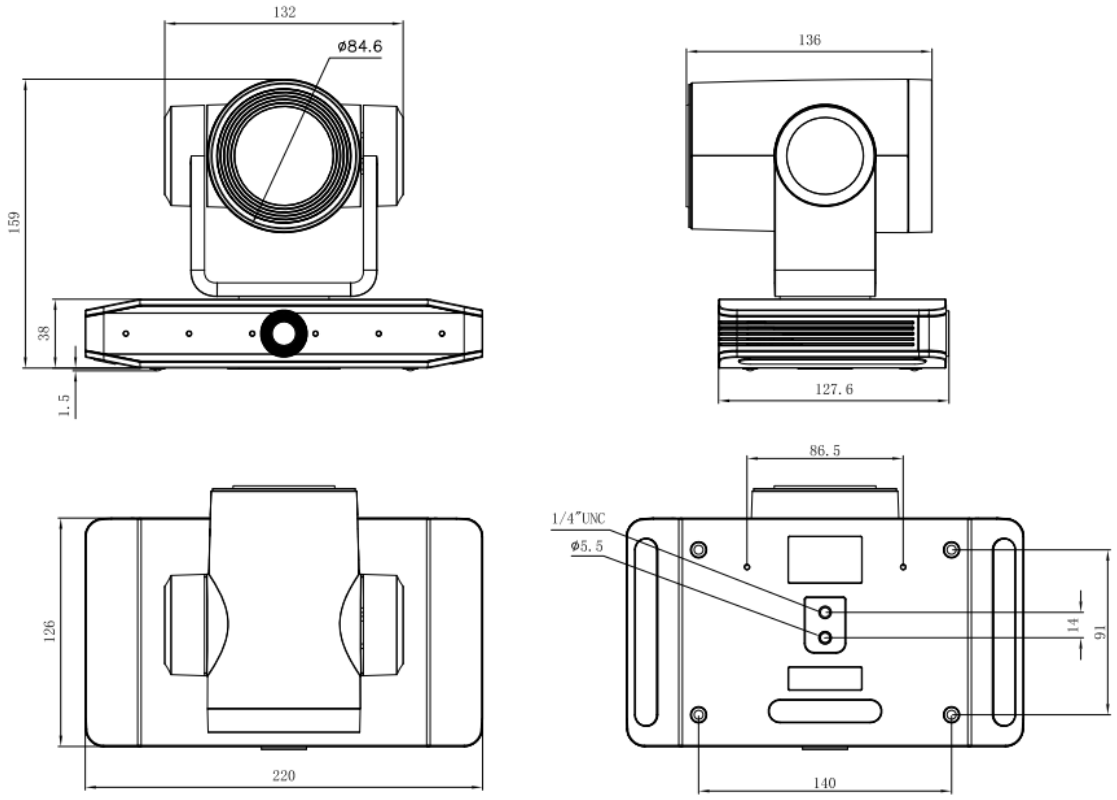

Figure1-4 Product Dimension

2.1.2 Accessory

When you unpack your package, check that all the supplied accessories are included:

Table1-1 Supplied Accessory

Supplied	Power adapter
	USB3.0 Cable
	User manual
	Plastic pad
	RS232 Cable

Optional	Wireless remote control
	IR Remote Control
	Brackets for wall mounting
	Brackets for ceiling mount

2.2 Product Feature

This is a brand new UHD 4K camera featuring complete functions, excellent performance and rich interfaces. Boasting advanced ISP processing technology and algorithm， this cameras deliver true-to-life image with uniform picture brightness. It supports H.265/H.264 coding, making the image smooth and clear even under low bandwidth.

- **4K UHD Resolution:** Adopting 8.5 million resolution SONY CMOS sensor. Maximum resolution is up to 4K with frame rate up to 30fps.
- **Optical Zoom Lens:** 12X optical zoom 80.5°wide-angle lens.
- **Leading Auto Focus Technology:** Fast, accurate and stable auto focusing technology.
- **Low Noise and High SNR:** Super high SNR image is achieved with low noise CMOS. Advanced 2D/3D noise reduction technology further reduces the noise while ensuring high image clarity.
- **Multiple Video Output Methods:** Support HDMI, USB3.0, wired LAN interface; support POE power supply, USB3.0 supports dual stream.
- **Multiple Audio/Video Compression Standards:** Support YUY2, MJPEG, H.264, H.265, NV12 video encoding formats, MJPEG, H.264, H.265 support up to 3840×2160 resolution 30 frames/second compression; support AAC, MP3, G.711A audio compression
- **Audio Input Interface:** Support AAC, MP3, G.711A audio encoding, AAC, MP3 encoding support 16000, 32000, 44100, 48000 sampling frequency.
- **Built in Gravity Sensor:** Built-in gravity sensor, supports automatic gimbal flip function, convenient for engineering installation
- **Multiple Network Protocol:** Support ONVIF, GB/T28181, RTSP, RTMP, VISCA OVER IP, IP VISCA, RTMPS, SRT protocols; support RTMP push mode, easily link streaming media servers (Wowza, FMS); support RTP multicast mode.
- **Control Interface:** RS232 IN

- **Multiple Control Protocol:** Support VISCA, PELCO-D, PELCO-P protocols; Support automatic identification protocols.
- **Low Power Sleep Mode:** Support low-power sleep/wake-up, power consumption during sleep is less than 400mW.
- **Multiple Presets:** Up to 255 presets (10 presets via remote control).
- **Multiple Remote Controls:** IR remote control and wireless remote control are for options.
- **Auto Framing:** Built in high speed processor and face detection algorithm, it can automatically detect the participants to provide optimal framing.
- **Intelligent Voice Tracking:** Built in 6 omnidirectional mics arrays, intelligent voice localization algorithm, it can track the speaker in the real time.
- **Multiple Application:** Online-education, Lecture Capture, Webcasting, Video conferencing, Tele-medicine, Unified Communication, Emergency command and control systems, etc.

2.3 Technical Specification

Table1-2 Camera Lens Parameter

Parameter/Model	12X
Lens	
Image Sensor	1/2.8 inch high quality CMOS sensor
Effective Pixel	8.5M, 16：9
Video Signal	HDMI： 4KP30, 4KP25, 1080P30, 1080P25, 1080P29.97； USB3.0: Main Stream：YUY2/NV12: 1920×1080/1280×720/1024×576/800×600/800×448/640×360/480×270/320×180@30/25fps; MJPG/H264: 3840*2160/1920×1080/1600×896/1280×720/1024×576/960×540/800×600/800×448/720×576/720×480/640

	×360/640×480/480×270/352×288/320×240@30/25/20/15/10/5fps; Sub Stream：YUY2/NV12: 1280×720/1024×576/800×600/800×448/640×360/640×480/480×270/320×180@30/25/20/15/10/5fps; MJPG/H264: 1920×1080/1600×896/1280×720/1024×576/960×540/800×600/800×448/720×576/720×480/640×360/640×480/480×270/352×288/320×240@30/25/20/15/10/5fps;
Close-up Lens	12X
Viewing Angle	H：7.6° （N）～80.5° （W）
Iris Value	F1.8 ～ F3.6
Digital Zoom	15X
Minimum Illumination	0.5Lux(F1.8, AGC ON)
DNR	2D & 3D
White Balance	Auto/Manual/One-Button White Balance/Specified Color Temperature
Focus Mode	Auto/Manual/One Button focus
Exposure Mode	Auto, Manual, Shutter Priority, Aperture Priority, Brightness Priority
Iris	F1.8 ～ F3.6, CLOSE
Shutter Speed	1/25～1/20000
BLC	On/Off
Dynamic Range	Off, 1 ～ 8
Video Adjustment	Brightness, Hue, Saturation, Contrast, Sharpness, Black and White Mode, Gamma Curve
SNR	>50dB

Panoramic Lens	Fixed Focus Lens
Viewing Angle	110.2°\101.8°\69.5°（D\H\V）
Iris	F2.0±5%
Focus	F=1.89mm

Table1-3 Interface

Interface	
Back Panel	HDMI, LAN (support POE), USB3.0, LINE-IN, RS232-IN, DC12V power supply, power switch
Video Output	HDMI, LAN, USB3.0
Video Compression Format	LAN：H.264, H.265 USB 3.0：MJPG, H264, YUY2, NV12
Audio Input	Dual channel 3.5mm line input
Audio Output	HDMI, LAN, USB3.0
Audio Compression Formats	AAC, MP3, G.711A
Network Port	10M/100M adaptive Ethernet port, support POE power supply, support audio and video output
Network Protocols	RTSP, RTMP, ONVIF, GB/T28181, VISCA OVER IP, IP VISCA, RTMPS, SRT, support remote upgrade, remote restart, remote reset
Control Jack	RS232-IN
Serial Port Communication Protocols	VISCA/Pelco-D/Pelco-P； Baud Rate: 115200/38400/9600/4800/2400
USB Communication Protocols	UVC（Video Communication Protocols），UAC（Audio Communication Protocols）
Power Supply	HEC3800 Power Socket (DC12V)

Power Adapter	Input: AC110V~AC220V ; Output: DC12V/2.5A
Input Voltage	DC12V±10%
Input Current	<1A
Power Consumption	<12W

Table1-4 PTZ Parameter

PTZ	
Pan Angle	-110° ～+110°
Tilt Angle	-30° ～+30°
Pan Speed	0.1°/s～100°/s
Tilt Speed	0.1°/s～70°/s
Preset Speed	Pan：78.8°/s，Tilt：31.7°/s
Preset Quantity	Maximum 255 (10 via remote control)

Table1-5 Other Parameter

Others	
Storage Temperature	-10℃～+60℃
Storage Humidity	20%～95%
Working Temperature	-10℃～+50℃
Working Humidity	20%～80%
Dimension	220（L）mm×136mm（W）×159mm（H）
Weight(Approx.)	1.7kg
Environment	Indoors

Table1-6 Accessory Parameter

Accessory

Standard Accessory	Power adapter, RS232 control cable, USB3.0 cable, remote control, user manual,
Optional Accessory	Installation brackets

Table1-7 AI Function

AI Function	
Auto Framing	Built in high speed processor and face detection algorithm, it can automatically detect the participants to provide optimal framing
Intelligent Voice Tracking	Turn on/off voice tracking. Built in 6 omnidirectional mics arrays, intelligent voice localization algorithm, it can track the speaker in the real time.

2.4 Interface Introduction

2.4.1 Interface Diagram

The interfaces of this product include: HDMI, USB3.0, and audio input interface, network interface, RS232 input, DC12V power supply, interface power switch. The back panel diagram is shown in Figure 2.5:

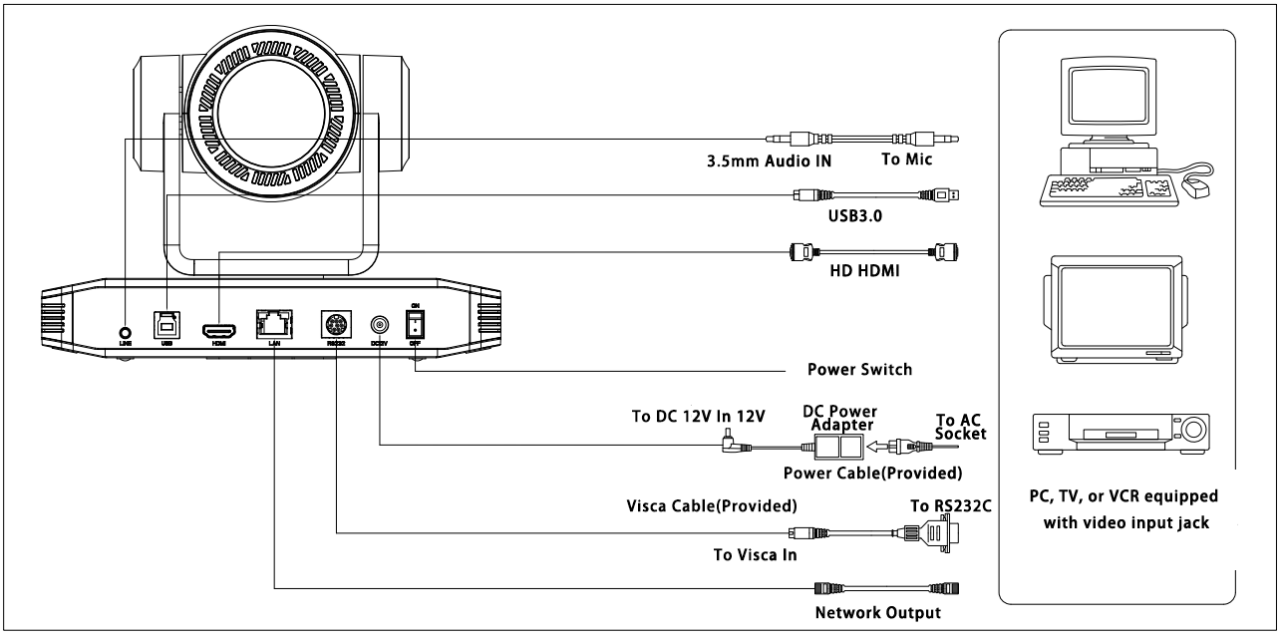

Figure1-5 Interface Diagram

2.4.2 RS-232

1）RS-232 Diagram

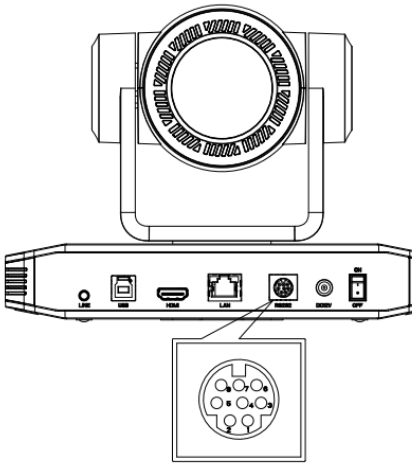

Table1-8 Connecting method to PC or controller

Device	WindowsDB-9
1.DTR	1.DCD
2.DSR	2.RXD
3.TXD	3.TXD
4.GND	4.DTR
5.RXD	5.GND
6.GND	6.DSR
7.IR OUT	7.RTS
8.NC	8.CTS
	9.RI

2）RS-232 Mini-DIN 8-pin Terminal Port Definition

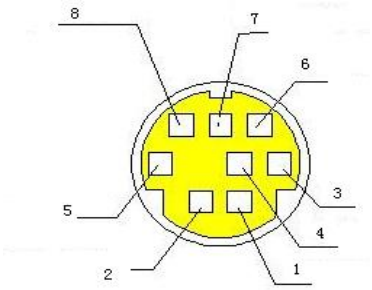

Table1-9 RS-232 Mini-DIN 8-pinTerminal Port Definition

NO.	Terminal Port	Definition
1	DTR	Data Terminal Ready
2	DSR	Data Set Ready
3	TXD	Transmit Data
4	GND	System Ground
5	RXD	Receive Data
6	GND	System Ground
7	IR OUT	IR Commander Signal IR
8	NC	No Connection

3）RS232(DB9) Terminal Port Definition

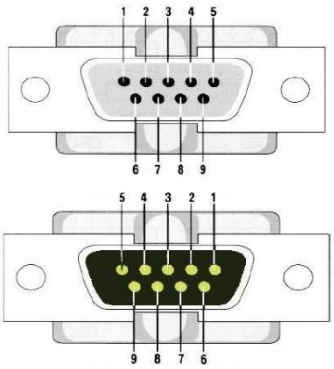

Table1-10 RS232(DB9) Terminal Port Definition

NO.	Terminal Port	Definition
NO.	Terminal Port	Definition
1	DCD	Data Carrier Detect
2	RXD	Receive Data
3	TXD	Transmit Data
4	DTR	Data Terminal Ready
5	GND	System Ground
6	DSR	Data Set Ready
7	RTS	Request to Send
8	CTS	Clear to Send
9	RI	Ring Indicator

4）VISCA Networking Method

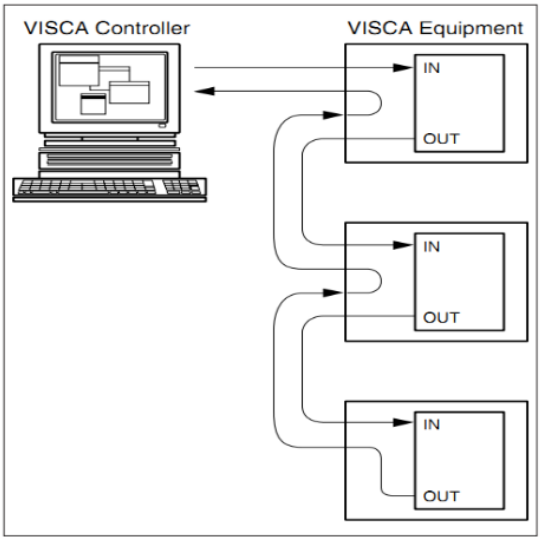

Device Cascading Connection Method

Device 1	Device 2
1.DTR	1.DTR
2.DSR	2.DSR
3.TXD	3.TXD
4.GND	4.GND
5.RXD	5.RXD
6.GND	6.GND
7.IR OUT	7.OPEN
8. NC	8.OPEN

Figure1-6 VISCA Networking Diagram

Caution

- This camera has RS232 Input/Output interface, you can cascade as above method

3. How to Use

3.1 Video Output

3.1.1 Power-on Self-test

After powering on, camera will have initial configuration and receiver light will be flashing. Camera will do a brief pan-tilt tour and return to the home position, or if preset 0 is set, the camera will return to the preset 0 position).

3.1.2 Video Output

1）Network output: connect this product and your computer through network cable, then open the browser, enter the camera IP address (factory default 192.168.5.163) in the address bar, then to the login page and input a user name and password (factory default are “admin”) ,Finally enter the preview page, and the image comes out.

Caution

- If you forget your user name, password, IP address, you can manually restore the default by the remote controller Button combination * #

2）SDI, HDMI Output: Connect the monitor with the corresponding video output interface.

3）USB3.0 Output: Connect this product with computer USB3.0 interface, open the Device Manager to see whether there is an image device and whether the Universal Serial Bus controllers recognize USB3.0 device. After properly identified, open the software, choose the image device and then it will output image.

3.2 Remote Control

Remote control using instruction: There are wireless remote control and IR remote control for options.

Steps for wireless remote control usage are as below:

1）Code Pairing

Press the "Settings" + "*" button for 3 seconds, the LED will turn off to flashing, after releasing the button, the LED light will keep flashing to start the code pairing, the receiver is powered on, and the LED will be off when the code pairing is successful; If you use other remote control, you need to clear the code of this remote control, or re-pair the code of the new remote control. If the code pairing has been unsuccessful,

the red LED light flashes for 20 seconds and then goes out, stop the code pairing and go to sleep; at this time, press any Button to wake up and re-pair the code.

Caution

- After the code is successfully matched, you need to select the camera address to control it

2）Clear Code Data

Press the "Settings" Button + "#" Button from light off to flashing, the receiving end is powered off and then powered on. The LED is off, indicating that the paired data is cleared successfully

3）Enter Sleep Mode and Wake Up

If there is no operation in the working state, it will immediately enter the sleep mode, and press any Button to wake up.

3.2.1 IR Remote Control

1. Standby Button

After 3S long press, the camera will step into standby mode. Long press 3S again, the camera will self-test again and back to HOME position. (Note: If power-on mode is turned on and Preset 0 is set, and there is no operation within 12s, it will automatically point to the specified preset position.

2. Camera Address Selection

Select the camera address which wants to be controlled

3. Number Button

Set or run 0-9 presets

4,*,# Button

Button combination use

5. Focus Control Button

Auto Focus: Enter into auto focus mode.

Manual Focus: The camera focus mode is manual

Switch the camera focus mode to manual focus by pressing [focus +] or [focus -] to adjust.

6. Zoom Control Button

Zoom + :Lens near

Zoom – :Lens far

7. Set or Clear Preset Button:

Set Preset: Set preset Button + 0-9 number Button:

Clear Preset Button: Clear preset Button + 0-9 number Button

8. Pan/Tilt Control Button

Press ▲Button :Up

Press ▼Button :Down

Press ◄Button :Left

Press ►Button: Right

“HOME” Button: Return to the middle position or enter into the next level menu

9. BLC Control Button

Back Light ON / OFF: Turn on or off the back light

10. Menu Setting

Open or close the OSD menu

Enter / exit the OSD menu or return to the previous menu.

11. Camera IR Remote Control Address Setting

【*】+【#】+【F1】:Camera Address No.1

【*】+【#】+【F2】:Camera Address No. 2

【*】+【#】+【F3】:Camera Address No. 3

【*】+【#】+【F4】:Camera Address No. 4

12. Button Combination Functions

【#】+【#】+【#】: Clear all presets	【#】+【#】+【0】: Switch Video Format into 4KP30
【*】+【#】+【6】: Restore Factory Default	【#】+【#】+【1】: Switch Video Format into 4KP25
【*】+【#】+【3】: Set Menu in Chinese	【#】+【#】+【2】: Switch Video Format into 1080P30
【*】+【#】+【4】: Set Menu in English	【#】+【#】+【3】: Switch Video Format into 1080P25
【*】+【#】+【9】: Switch between Wall Mount and Ceiling Mount	【#】+【#】+【4】: Switch Video Format into 1080P29
【*】+【#】+Auto: Enter Aging Mode	
【#】+【*】+Auto: Stop Aging Mode	
【*】+【#】+ Auto: Reset IP/User Name/Password	

3.2.2 Remote Control Usage

Finishing initialization, it can receive and execute the IR commands. Press the remote controller button, the indicator light is flashing; release the button, the indicator light stops flashing. Users can control the pan/tilt/zoom, setting and running preset positions via the IR remote controller.

Button Instruction:

1. In this instruction, “press the Button” means a click rather than a long-press, and a special note will be given if a long-press for more than one second is required.

2. When a Button-combination is required, do it in sequence. For example,“ 【 *】+ 【#】+【F1】”means press“【*】”first and then press“【#】” and last press“【F1】”

1）Camera Selection

Select the camera address to control.

2) Pan/Tilt Control

Up: press ◀Down: press ▲

Left: press ▼Right: press ◀

Back to middle position: press“【HOME】”

Press and hold the up/down/left/right Button, the pan/tilt will keep running, from slow to fast, until it runs to the endpoint; the pan/tilt running stops as soon as the Button is released.

3）Zoom Control

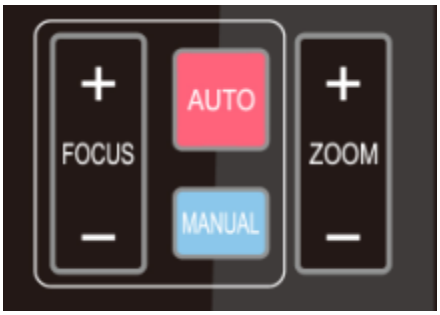

ZOOM IN: press “ZOOM ▼“ Button

ZOOM OUT: press “ZOOM ◀” Button

Press and hold the Button, the camera will keep zooming in or zooming out and stops as soon as the Button is released.

4) Focus Control

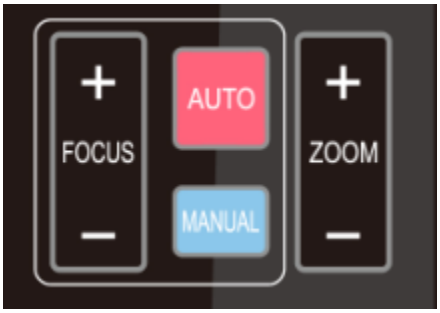

Focus (near):Press “【focus+】” Button (Valid only in manual focus mode)

Focus (far): Press “【focus-】”Button (Valid only in manual focus mode)

Auto Focus: Support

Manual Focus: Support

Press and hold the Button, the action of focus will keep continue and stops as soon as the Button is released.

5) BLC Setting

BLC ON / OFF: support

6）Presets Setting, Running, Clearing

1. Preset setting: to set a preset position, the users should press the “【SET PRESET】” Button first and then press the number Button 0-9 to set a relative preset,

Note: 10 preset positions in total are available by remote controller.

2. Preset Running: Press a number Button 0-9 directly to run a relative preset.

Note: Action in vain if a relative preset position is not existed.

3. Preset clearing : to clear a preset position, the user can press the “【CLEAR PRESET】” Button first and then press the number Button 0-9 to clear the relative preset;

Note : press the“【#】” Button three times continually to cancel all the presets.

7）Camera Remote Controller Address Setting

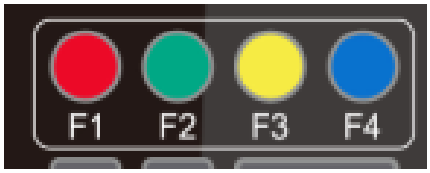

【*】+【#】+【F1】:Camera Address No.1

【*】+【#】+【F2】:Camera Address No. 2

【*】+【#】+【F3】:Camera Address No. 3

【*】+【#】+【F4】:Camera Address No. 4

3.3 Menu Setting

3.3.1 Main Menu

In normal working mode, press 【MENU】Button to display the menu, using scroll arrow to point at or highlight the selected items.

MENU
= = = = = = = = = = = = = = = = =
Language English
(Setup)
(Camera)
(P/T/Z)
(Video Format)
(Version)
(Restore Default)

[↑ ↓]Select [← →]Change Value
[Menu]Back [Home]OK

Language: Chinese/English

Camera Parameter : Enter into submenu of camera parameter

Version: Enter into submenu of version

Restore Factory Default: Select Yes or No to restore factory default.

[↑↓]Select: Press**[↑↓]** to Select menu

Setting: Enter into submenu of system setting

P/T/Z : Enter into submenu of PTZ parameter

[← →]Revise: Press [← →] to revise parameter

[Home]Confirm : Press [Home] to confirm

[Menu]Return: Press [Menu] to return

3.3.2 Tracking Setting

```
Track Setting
= = = = = = = = = = = = = = = =
Auto Framing              ON/OFF
Voice Location            ON/OFF
Track Mode                Pan
                          Movies

[↑ ↓]Select[← →]Change Value
[Menu]Back            [Home]OK
```

Tracking Mode: On/Off

3.3.3 System Setting

Move the pointer to the (Setup) in the Main Menu, click the 【HOME】 Button and enter into the (System Setting) as shown below

```
SETUP
= = = = = = = = = = = = = = =
Protocol                  Auto
Visca Address                1
Visca Address Fix          OFF
PELCO-P Address              1
PELCO-D Address              1
Baudrate                  9600
USB tranmissiong mode      OFF
Auto Flip                  ON

[↑ ↓]Select[← →]Change Value
```

PROTOCOL: VISCA/Pelco-P/Pelco-D/Auto

Visca ADDR: VISCA=1~7 Pelco-P=1~255 Pelco-D = 1~255

Visca Address Fix: On/Off

USB Dual Stream: On/Off

Auto Flip: On/Off

3.3.4 Camera Parameter Setting

Move the pointer to the (CAMERA) in the Main Menu, click the 【HOME】 Button and enter the (CAMERA) as follow

```
CAMERA
= = = = = = = = = = = = = = = =
(Exposure)
(Color)
(Image)
(Focus)
(Noise Reduction)
  Style                    Default
[↑ ↓]Select        [← →]Change Value
[Menu]Back                [Home]OK
```

Exposure: Enter into Exposure setting

Color: Enter into color setting

Image: Enter into image setting

Focus: Enter into focus setting

Noise Reduction: Enter into noise reduction

Style: Default, standard, clear, bright, soft

1）Exposure

Move the pointer to the (EXPOSURE) in the Main Menu, click the 【HOME】 and enter the (EXPOSURE SET) as follow

```
EXPOSURE
= = = = = = = = = = = = = = =
Mode                      Auto
EV                        OFF
BLC                       OFF
Flicker                   50Hz
G.Limit                     7
DRC                         2

[↑ ↓]Select      [← →]Change Value
[Menu]Back
```

Mode : Auto, Manual, Shutter priority, Iris priority and Brightness priority.

EV : On/Off (only available in auto mode)

Compensation Level: -7~7 (only available in auto mode when EV is ON)

BLC: ON/OFF for options (only available in auto mode)

Anti-Flicker: OFF/50Hz/60Hz for options (only available in Auto/Iris **priority**/Brightness priority modes)

Gain Limit: 0~15(only available in Auto/ Iris priority /Brightness priority mode)

WDR: Off,1~8

Shutter Priority: 1/25, 1/30, 1/50, 1/60, 1/90, 1/100, 1/120, 1/200, 1/250, 1/350, 1/500, 1/1000, 1/2000, 1/3000, 1/4000, 1/6000, 1/10000, 1/20000 (only available in Manual and Shutter priority mode)

IRIS Priority: :OFF,F11.0,F9.6,F8.0,F6.8,F5.6,F4.8,F4.0,F3.4,F2.8,F2.4,F2.0,F1.8 (only available in Manual and Iris priority mode)

Brightness: 0~20 (only available in Brightness priority mode)

2）Color

Move the pointer to the (COLOR) in the Main Menu, click the【HOME】and enter the (COLOR SET) as follow

```
COLOR
= = = = = = = = = = = = = = =
WB Mode                Auto
RG Tuning               -10
BG Tuning               -10
Saturation              100%
Hue                  7
AWB Sensitivity         High

[↑ ↓]Select[← →]Change Value
[Menu]Back
```

WB Mode: Auto, Manual, One Push, 3000K/3500K/4000K/4500K/5000K/5500K/6000K/6500K/70000K.

Red Tuning: -10~10(only available in Manual mode)

Blue Tuning: -10~10(only available in Manual mode)

Red Gain: 0~255(only available in Manual mode)

Blue Gain: 0~127(only available in Manual mode)

Saturation: 60%, 70%, 80%, 90%, 100%, 110%, 120%, 130%, 140%, 150%, 160%, 170%, 180%, 190%, 200%

Hue: 0 - 8

AWB Sensitivity: high/middle/low (only available in Auto mode)

Color Temperature: 2400K-7100K (Only available in specified color temperature)

3）IMAGE

Move the pointer to the (IMAGE) in the Menu, click the 【HOME】 and enter the (IMAGE) as follow

```
IMAGE
= = = = = = = = = = = = = = = =
Brightness                50
Contrast                  50
Sharpness                  4
Auto Flip                 ON
B&W-Mode               Color
Gamma                   0.52
DZoom                    OFF
Low-Light Mode          Close

[↑ ↓]Select[← →]Change Value
[Menu]Back
```

Brightness: 0~100

Contrast: 0~100

Sharpness: 0~15

B&W Mode: Color, black/white

DZoom: On/Off

Gama Curve: Default, 0.45, 0.50, 0.55, 0.63

Minimum Illumination: On/Off

4）Focus

Move the pointer to the (FOCUS) in the Menu, click the 【HOME】 and enter the (FOCUS) as follow.

```
FOCUS
= = = = = = = = = = = = = = =
Focus Mode                    Auto
AF-Zone                       All
AF-Sensitivity                Low

[↑ ↓]Select      [← →]Change Value
```

Focus Mode: Auto, manual

AF-Zone: Up/middle/down

AF-Sensitivity: High, middle, low

5）Noise Reduction

Move the pointer to the (NOISE REDUCTION) in the Menu, click the【HOME】and enter the (NOISE REDUCTION) as follow

```
NOISE REDUCTION
= = = = = = = = = = = = = = =
NR-2D                         3
NR-3D                         3

[↑ ↓]Select [← →]Change Value
[Menu]Back
```

2D Noise Reduction: Off, 1~8

3D Noise Reduction: Off, 1-8

3.3.5 P/T/Z

Move the pointer to the (P/T/Z) in the Main Menu, click the【HOME】and enter the (P/T/Z) as follow

```
P/T/Z
= = = = = = = = = = = = = = = =
Speed by zoom                ON
Zoom speed                    8
Image Freezing              OFF
Acc Curve                  Slow
Preset speed                 10

[↑ ↓]Select [← →]Change Value
[Menu]Back
```

Depth of Field: Only effective for remote controller, On/ Off;

When zoom in, the Pan/Tilt control speed by remoter will become slow

Zoom Speed: Set the zoom speed for remote controller,1~8

Image Freezing: On/Off

Accelerating Curve: Fast/slow

Preset Speed: 1-10

3.3.6 Video Format

Move the pointer to the (Video Format) in the Menu, click the 【HOME】 and enter the (Video Format) as follow

```
VIDEO FORMAT
= = = = = = = = = = = = = = =
4KP30                  4KP25
1080P30              1080P25
1080P29.97

[↑ ↓]Select
[Menu]Back          [Home]OK
```

Caution

- Exit menu after modifying parameter to save it

3.3.7 Version

Move the pointer to the (VERSION) in the Main Menu, click the【HOME】and enter the (VERSION) as follow

```
VERSION
= = = = = = = = = = = = = = = =
MCU Version                3.2.0
Camera Version             1.0.0
AF Version                 1.0.0

[Menu]Back
```

MCU Version: Display MCU version information

Camera Version: Display camera version information

AF Version: Display the focus version information

3.3.8 Restore Default

Move the pointer to the (VERSION) in the Main Menu, click the【HOME】and enter the (VERSION) as follow.

```
RESTORE DEFAULT
= = = = = = = = = = = = = = = =
Restore   Default?            NO

[↑ ↓]Select    [← →]Change Value
[Menu]Back              [Home]OK
```

Restore default: Yes/No ;(after restoring default, the language, color, and video format won't be restored)

Caution

- If the address of former remoter is not 1 but another one from 2,3,4,the corresponding camera address will restore to 1 when all parameters or system parameters are restored. User should change the remoter address to be 1 (press No.1 according to the camera so to get normal operation)

4. NETWORK CONNECTION

4.1 Connection Method

Direct Connection: Direct connections via "cross-over" network cable

Connection to LAN: Connections to LAN via patch cable to LAN wall jack or LAN switch

Caution

- Please do not put the power and network cable in places where can be easily touched to prevent video quality lowered by unstable signal transmission due to poor contact of cables.

The computer must have the network segment where the camera IP address belongs to. The device will not be accessible if without the segment. I.E. The camera default IP address is 192.168.5.163, then segment 5 must be added in the computer. Specific steps are as below:

Firstly open the window of Local Area Connection Properties on computer, select the "Internet protocol version 4(TCP/IPv4)" as shown by picture on the left. Double click or click the property "Internet" protocol version 4 (TCP/IPv4)to enter into the Internet Protocol Version 4(TCP/IPv4) Properties window, select "Advanced" to enter into the Advanced TCP/IP Setting and add IP and subnet mask in the IP browser as picture shown below. Click the "Confirm" to finish the adding of IP segment. User can add the corresponding network segment according to the revised IP address of the camera.

Caution

- The IP address to be added cannot be same with that of other computers or devices. The existence of this IP address needs to be verified before adding.

Click the "Start" and select "Operation" to input cmd as picture below to verify if the network segment has been successfully added.

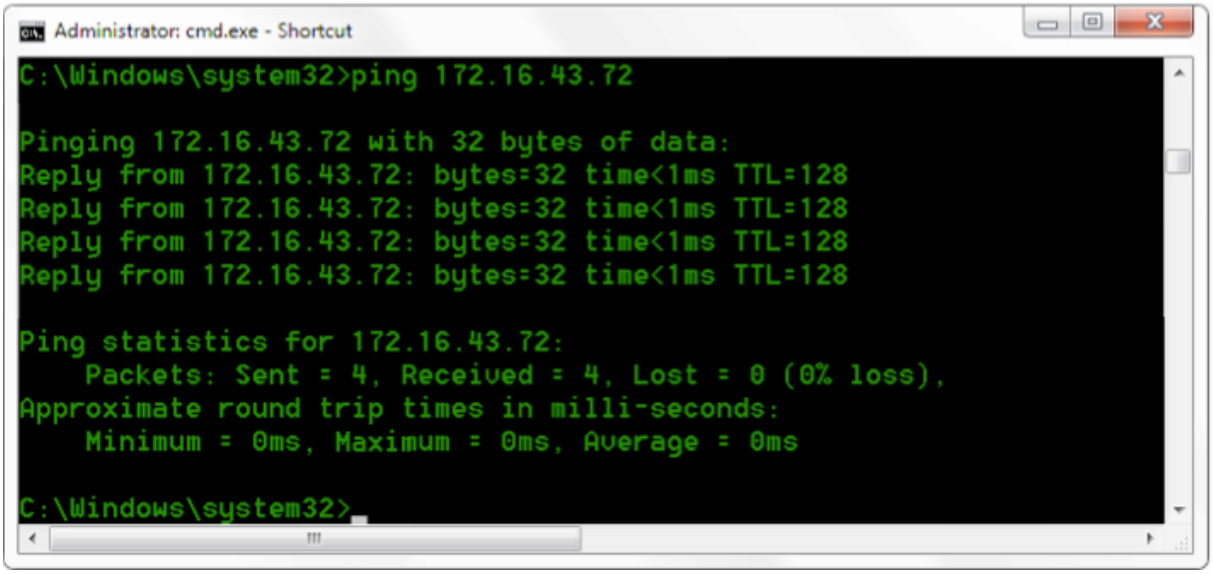

Figure1-7 Network segment successfully added

User can also to verify network connection as steps above mentioned after the finish of camera self-check. If IP is default, open DOS command window and input 192.168.5.163, then press Enter Button. It will show message as below: which means network connection is normal.

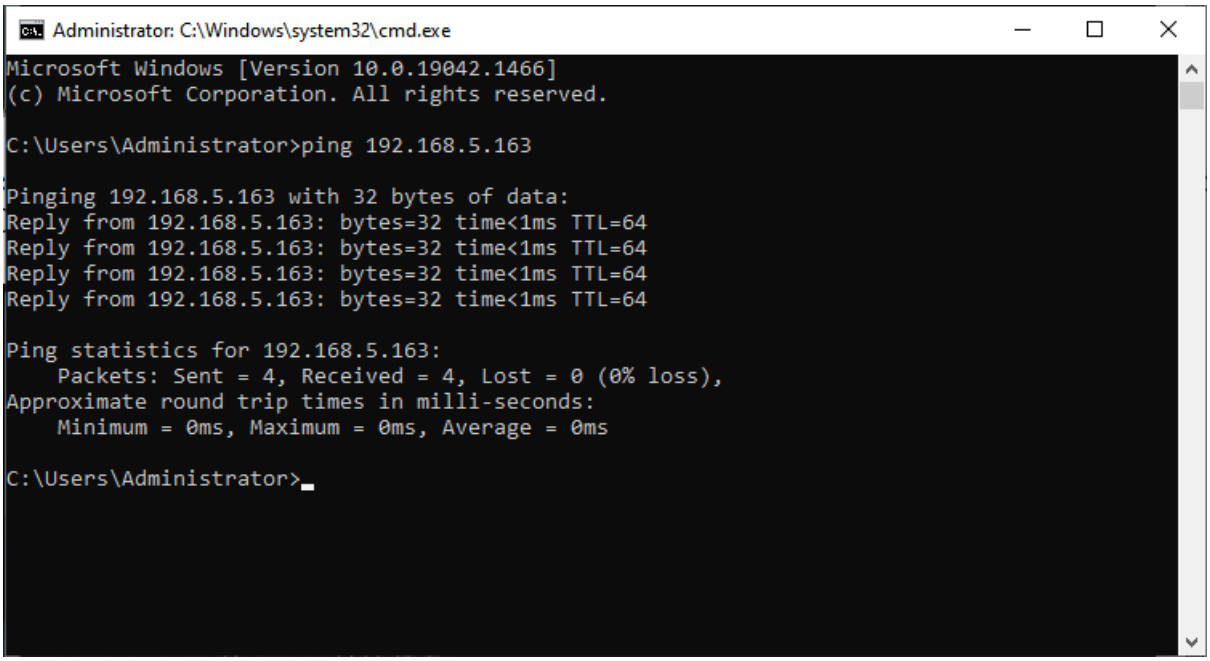

Figure1-8 Network Connection Screenshot

4.2 Camera Web Interface

4.2.1 Web Login

1）Web Login

After assigning an IP address to the camera, you can reach the Web Interface by typing in the camera's IP address into a web browser. You can log in this interface as administrator or user. If as administrator, type in "admin" into the username and password fields. If as user, type in "user1" or "user2" into the username and password fields. From the Web Interface, you can control the camera using the arrows on the left side. You can also adjust many of your camera's settings via this IP interface.

Note:

1. If login as "user", your rights are limited to preview, playback, and logout (No configuration right)

2. Browsers that support Web function are Google, IE, 360 and other popular browsers.

Language Selection: On the right top of the interface display "中文|English", click "English".

2） Download Plug-in

When first using IE browser to access the web conferencing camera, the login page will appear "Playback plug-in is not installed, please download and install!" Click on this message, download and install MRWebXinstall.exe, according to information prompts.

After installing the plugin, enter user name and password, click and Sign (initial default user name and password: "admin", users can change the user name and password on their own after entering) into the Web client management interface.

4.2.2 Preview

After successful login into the management interface, it enters the video preview interface. In the preview screen, users can control PTZ, zoom, focus, video capture, sound, focus, full screen and set the preset position, run, delete and other operations.

You can record the video and save it on SD Card when SD Card built in. Video can be saved on the Computer at Local.

1）Login as administrator

User name and default password: admin

You can control PTZ, zoom, focus, video capture, sound, focus, full screen and set run, and delete the preset position.

2）Login as user

User name and default password: “user1” or “user2”

You can control PTZ, zoom, focus, video capture, sound, focus, full screen and set run, and delete the preset position.

4.2.3 Configuration

Click Configuration to enter into the device parameters setting page

There are the following options: video configuration, network configuration, internet access configuration, system configuration, detailed description see the following table.

Table1-11 Explanation of Camera Configuration

Menu	Explanation
Video Configuration	Including video encoding, video parameters, character-overlapping, character size, video output setting etc.
Network Configuration	Including basic parameters, Ethernet, DNS, wireless network setting, GB28181 etc.
System Configuration	Including equipment property, system time, user management, version update, Reset, Reboot device settings etc.

4.2.4 Video Configuration

1）Video Encoding

Code Stream: Different video output mode setting, use different streams. (Main stream, secondary stream)

Compression Format: Set the video compression format, save to take it effect (primary / secondary stream default: H.264,H.265 optional)

Profile: Profile Mode Setting (Default HP， BP,MP Optional)

Video Size: Set video image resolution, save to take it effect (main stream default 1920 * 1080 or 1280 * 720 optional; default secondary stream 640 * 320,320 * 180,1280 * 720,1920 * 1080 optional)

Stream Rate Control: Set rate control mode, save to take it effect (Primary / secondary stream default variable bit rate, fixed rate is for option).

Image Quality: Set the image quality, image quality can be changed only when rate control is variable bit rate,(main stream defaulted is better, secondary stream default is not good, there are best, better, good, bad, worse, worst for options).

Rate (Kb / s): Set the video bit rate (main stream default 4096Kb / s,64-12288Kb / s optional; secondary stream default 1024Kb / s,64-10240Kb / s optional).

Frame rate (F / S): Set the video frame rate (primary / secondary stream default 25F / S, primary stream 5-60F/S optional, secondary stream 5-30F / S optional).

Key frame interval: Set the Button frame interval (primary / secondary stream default 75F,primary / stream 1-300F optional. secondary stream 1-150F optional).

Minimum QP of key frame interval: Set minimum QP of Button frame interval(Default 20, 10-51 optional)

Stream Name: When streaming via rtsp or rtmp, user can modify stream name. Main Stream(live/av0), sub stream(live/av1)

Click the "Save" button to display the "Parameter saved successfully" message, then settings take effect.

2) Stream Release

Switch: To turn on/off the main / secondary stream.

Protocol: primary / secondary stream applies RTMP protocol.

Host Port: server port number (default 1935,0-65535 optional)

Host Address: server IP addresses (default 192.168.5.11)

Stream Name: choose a different stream name (live / av0,live / av1 optional).

User: Set the user name.

Password: Set the password.

Click on the "Save" button to display the "Save successful" message,then settings take effect.

3）RTP Broadcasting

Main/Sub Stream： On/off；

Protocol： RTP or TS

Address： Default 224.1.2.3. It can be edited.

Port： The main stream defaults to 4000, the secondary stream defaults to 4002, and the main/secondary stream is optional from 0 to 65535.

Visit： Address comes up after setting. Eg; rtp://224.1.2.3:4000；udp://@224.1.2.3:4000； tcp://@224.1.2.3:4002；

4) Video Parameters

A）Focus: Focus mode, focus tactic, focus sensitivity can be set.

Focus Mode: set the focus mode (Default automatic, manual optional, one-push)

Focus Tactic: set the focus tactic (Default before-focus, after-focus, normal meeting, education tracking, moving-target focus, center focus optional.)

Focus Sensitivity: Set the focus sensitivity (default is low, high, medium optional)

B）Exposure: Exposure mode, exposure compensation, backlight compensation, anti-flicker, gain limit, dynamic range, shutter, aperture, brightness, gain can be set.

Exposure Mode: Set the exposure mode (Default automatic, manual, shutter priority, aperture priority, brightness priority optional)

Exposure Compensation: Exposure compensation setting is active when it is auto status (default is off).

Exposure Compensation Value: Set the exposure compensation value, valid when Exposure Compensation is on (default 0,-7 to 7 optional).

BLC: Set back light compensation, valid when it is auto status (default is off).

Gain Limit: Set the gain limits, valid in auto focus, iris priority, and brightness priority.

Gain: Set gain, only valid in manual exposure mode and shutter priority (default 0, 0~20 optional)

Dynamic Range: Set the dynamic range (default 4, 1-8 optional).

Shutter Speed: Set shutter speed value, valid in manual focus and shutter priority. (default 1/100，
1/25,1/30,1/50,1/60,1/90,1/100,1/120,1/180,1/250,1/350,1/500,1/1000,1/2000,1/3000 ,1/4000,1/6000,1/10000 optional).

Aperture Value: Set the aperture value, valid in auto focus and iris priority (default F1.8,closed, F11, F9.6,F8.0,F6.8,F5.6,F4.8,F4.0,F3.4,F2 .8,F2.4,F2.0,F1.8 optional).

Brightness: Set the brightness value, valid in brightness priority mode (default 7,0-23 optional).

C）Color: White balance, saturation, hue, white balance sensitivity, red fine tuning, blue fine tuning, red gain, blue gain can be set.

White Balance Mode: Set the white balance mode (Default automatic, manual, one-push white balance, 3000K, 3500K, 4000K, 4500K, 5000K, 5500K, 6000K, 6500K, 7000K optional).Note: Right click the “Correction” button when selected the One-push white balance mode.

Saturation: Set the saturation (default 100%， 60%, 70%, 80%, 90%, 100%, 110%, 120%, 130%, 140%, 150%, 160%, 170%, 180%, 190%, 200% optional).

Red Fine Tuning: Set red fine tuning, valid in manual white balance mode.

Blue Fine Tuning: Set Blue fine tuning, valid in manual white balance mode.

Chroma: Set the chrome (default 7, 0-14 optional).

Auto White Balance Sensitivity: Sensitivity Auto white balance settings (default is low, high, medium optional).

Red Gain: Set the red gain, effective when it is manual (default 145, 0-255 optional).

Blue Gain: Sets the Blue gain, effective when it is manual (default 56, 0-255 optional).

D）Image: You can set brightness, contrast, sharpness, gamma curve, dynamic contrast, black and white mode, horizontal flip, vertical flip, electronic zoom, ultra-low illumination

Brightness: Set the brightness (default 7, 0-14 optional).

Contrast: Set the contrast (default 7, 0-14 optional).

Sharpness: Set the sharpness value (default 6, 0-15 optional).

Gamma: Gamma value setting (default 0.45, 0.50, 0.55, 0.63 optional).

Dynamic Contrast: Set dynamic contrast (default off, 1-8 optional)

BW Mode: Set black and white mode (default color, black/white optional).

Digital Zoom: Set digital zoom (default off, on optional)

Lens Distortion Calibration: Set image distortion (default off, on optional)

E）Noise Reduction: 2D noise reduction, 3D noise reduction and dynamic dead pixel correction available.

2D Noise Reduction: Set 2D noise reduction level (default 3, 1-8 and off optional).

3D Noise Reduction: Set 3D noise reduction level (default 3, 1-8 and off optional).

Dynamic dead pixel correction: Set Dynamic dead pixel correction (default 4, 1-5 optional).

F）Style: Select image (Default, standard, brightness, clarity, and soft can be set)

⚠ Caution

- Refresh the page after changing above parameters in a, b, c, d, e, f to take effect.

5）Character Overlapping

Display Time & Date: Yes/No

Display Title: Yes/No

Time, Font and Color: Default white, black, yellow, red and blue optional)

Title Font Color: Default white, black, yellow, red, and blue optional)

Move Character: Set the location where the time and title to display. Click " up, down, left, right" button to move the characters' location.

Title: Set title on device property (default CAMERA1)

Time: Set time on system time (default 1970/01/01 05:36:00)

Click "Save" button, "parameters are successfully saves" window pop-up, which means the setting take effect.

6）Character Size

Automatically Adjust According to the Resolution: Yes/No

Main Stream Character Size: Set the character size of the display, the device will automatically restart after changed (default 48, 28-200 optional)

Secondary Stream Character Size: Set the character size of the display, the device will automatically restart after changed (default 48, 28-200 optional)

Click "Save" button, "parameters are successfully saves" window pop-up, which means the setting take effect.

7）Video Output

Output Format: Set the video output format

Click "Save" button, "parameters are successfully saves" window pop-up, which means the setting take effect.

4.2.5 Network Configuration

1) Network Port

Data Port: set the data port, the device will restart automatically after changed (default 3000,0-65535 optional).

Web Port: Set Web port, the device will restart automatically after changed (default is 80, 0-65535 is optional).

Onvif Port: Set Onvif port, the device will restart automatically after changed (default 2000, 0-65535 optional).

Soap Port: Set Soap port (default 1936, 0-65535 optional).

RTMP Port: Set RTMP port (default 1935, 0-65535 optional).

RTSP Port: Set RTSP port, the device will restart automatically after changed (default 554,0-65535 optional).

Visca Port: Set Visca port, the device will restart automatically after changed (default 3001,0-65535 optional).

Https Port: Set http port, the device will restart automatically after changed (default 443, 0-65535 optional).

WebSocket Port: Set WebSocket port, the device will restart automatically after changed (default 8088, 0-65535 optional).

Click on the "Save" button, it will be valid when display "Save successful".

RTMP access: RTMP: / / equipment IP address: 1935 / live/av0 (av0 main stream; av1 second stream)

RTMP Access: **Rtmp://equipment IP address: 1935 / live/av0 (av0 main stream; av1 second stream)**

2）Ethernet Parameter

DHCP: Enable or disable obtain IP automatically can be set. After saved, reboot the device to takes effect (default: OFF)

IP Address: Set the IP address, after saved, reboot the device to takes effect (default 192.168.5.163).

Note: This IP address is the same with the one used to login Web page.

Subnet Mask: Set the subnet mask (default 255.255.255.0).

Default Gateway: Set the default gateway (default 0.0.0.0).

Physical Address: Set the physical address (the parameter is read-only)

Click the "Save" button, it will be valid when display "Save successful". (Note: To prevent IP conflicts when modify).

3) DNS parameters

Preferred DNS Server: Set the preferred DNS server. (Default 0.0.0.0).

Alternate DNS Server: Set alternate DNS server. (Default 0.0.0.0).

Click the "Save" button, it will be valid when display "Save successful".

4) GB28181

Switch: Set whether to activate GB28181.

Time Synchronization: Enable/Disable time synchronization

Stream Type: Set stream type (default main stream, secondary stream optional)

Signing Time (in seconds): 3600, range 5-65535

Heartbeat Time (seconds): 60, range 1-65535

Register ID: 34020000001320000001

Register User Name: IPC

Register Password: 12345678

Equipment Ownership: Users can add their own

Administrative Regions: Users can add their own

Alarm Zone: Users can add their own

Equipment Installation Address: Users can add their own

Local SIP Port: 5060 Range 0-65535

GB28181 Server Address: IP address of the computer

Server SIP Port: 5060 Range 0-65535

Server ID: 34020000002000000001

Click on the "Save" button, it will be valid when display "Save successful".

5) SRT

SRT Port: Set the SRT port (default 9000, 0-65535 optional)

SRT Password: Set SRT password

SRT Password Length: Set the SRT password length (default 0, 16, 24, 32 optional)

Click the "Save" button, and the prompt message "Parameters saved successfully! It will take effect after restarting!"

6) RTSP

Enable RTSP: Enable/Disable RTSP

RTSP Authentication: Set RTSP authentication, default off, on optional

Click the "Save" button, and the prompt message "Save successfully! Modify RTSP authentication parameters will take effect after restarting the device!" will be displayed. After setting, restart the camera to take effect.

4.2.6 System Configuration

1) Device Properties

Device Name: Set the device name (Default Camera-1, user can add their own).

Device ID: Set the device ID (default 1, read-only).

System Language: Set the system language (default Simplified Chinese, English optional).Need to re-login after modify and save the setting.

Click on the "Save" button, it will be valid when display "Save successful".

2) System Time

Date Format: Set the date format (YYYY-MM-DD default year - month - day, MM-DD-YYYY namely Month - Day - Year, DD-MM-YYYY date - month - year Optional).

Date Separator: set the date separator (default '/','.','-' Optional).

Time Zone: Set the time zone (default UTC+08:00, other time zones optional).

Time Type: Set the time types (default 24 hours, optional 12 hours).

Enable NTP: Enable/disable NTP

Update Interval: Set the NTP server automatic updated time interval. Valid after setting NTP server synchronization (default one day, 2-10 days Optional).

NTP Server Address or Domain Name: Set NTP server address or domain name (default time.nits.gov). Valid after setting NTP server synchronization.

NTP Server Port: Sets the NTP server port (default 123).Valid after setting NTP server synchronization.

Click on the "Save" button, it will be valid when display "Save successful".

3) User Management

Select Users: Set the user type (the default administrator, User 1, User 2 optional)

User Name: Set the user name (Select User Administrator default admin; select a common user1 default user1; to select a common user 2 default user2; user can modify their own)

Password: Set a password (Select User Administrator default admin; select a common user1 default user1; to select a common user 2 default user2; user can modify their own).

Password Confirmation: Confirm the input passwords are the same or not.

4）Version Update

The version information displayed on the page is read-only version and cannot be modified by the user. It is the same as the version information in the menu. The version information of different device models is different.

Update File: Click "Browse..." in the pop-up window and select the upgrade file; click the "Upgrade" button, the upgrade dialog box will pop up. After successfully update, device will automatically reboot. (Note: Make sure that the device power and network can work during update, if not, the upgrade will fail.)

Caution

- After the version upgrade is completed, you need to restore the factory default values

a, restore the factory default through web configuration;

b, restore the factory default value through the menu;

c, remote control shortcut Button *#6 restore factory default;

Choose one of the above three methods, in which the IP account and password of “method a” are also restored to the default.

5) Restore Factory Setting

Click "Restore Factory Defaults" button and choose “yes” or “no” on pop-up window, then the device will restart automatically and restore factory setting.

6) Reboot

Click "Reboot" button and choose “yes” or “no” on the pop-up window, then the device will restart automatically.

4.2.7 Logout

Click "Logout"; and select "Yes" or "No" on pop-up window. If choose “Yes”, you will exit the current page and return to the user login interface again.

4.2.8 Tracking Function Configuration

1. Enter into the management interface after login, next to select “enter into tracking interface” where you can turn on/off the tracking function.

2. At the right top is the PTZ management interface where you can set tracking zones, and at the bottom right is tracking configuration interface, show as below screenshot.

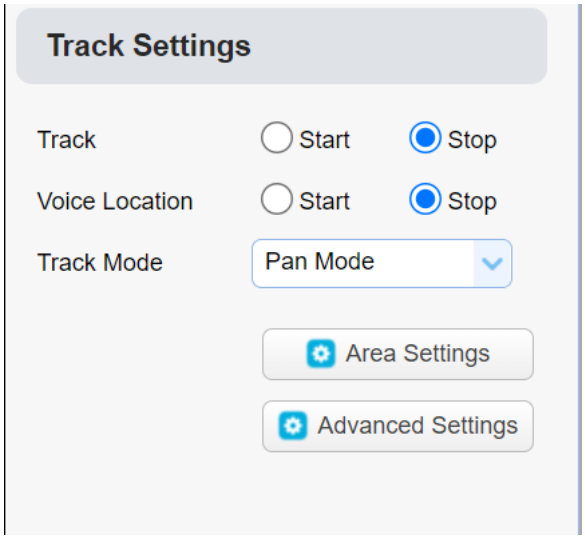

Auto Framing: Built in face detection algorithm, it can automatically detect participants to provide the optimal framing.

Voice Tracking: Voice localization and tracking system is used to trace the voice source and the lens will move according to the speaker's position and capture the corresponding image.

The camera has two image switching modes:

Movie Mode: In this mode, when user change tracking target from A to B, the transition screen will be "Close-up target A → Panoramic Image → Close-up target B

Pan Mode: In this mode, when tracking target is shifted from A to B, the transition image will be continuous close-up image.

Zone Setting: Users can set PiP (picture-in-picture) and shield partial tracking zones (maximum 10 shielding zones). When set the zones, first you need to select the enable box, next to select the zones (Background is in yellow), at last frame the zones with mouse on the left space.

5. Serial Port Communication Control

In normal working state, you can control the camera through RS232/RS485 (VISCA IN) cable. The parameter of RS232 is as below:

Baud rate: 2400/4800/9600/115200/second

Start Bit: 1 bit;

Data Bit: 8 bit;

Stop Bit: 1 bit;

Verification Bit: None.

After power on, the camera will have a brief tour and then back to the center position.

The zoom lens is pulled to the farthest position, and then pulled back, after that self-test is completed.

5.1 VISCA Protocol List

5.1.1 VISCA Protocol List

Ack/Completion Message		
	Command packet	**Remark**
ACK	z0 41 FF	Returned when the command is accepted.
Completion	z0 51 FF	Returned when the command has been executed.

z = device address + 8

Error Messages		
	Command packet	**Remark**
Syntax Error	z0 60 02 FF	Returned when the command format is different or when a command with illegal command parameters is accepted.
Command Buffer Full	z0 60 03 FF	Indicates that two sockets are already being used(executing two commands) and the command could not be accepted when received.

Command Canceled	z0 6y 04 FF(y: Socket No.)	Returned when a command which is being executed in a socket specified by the cancel command is canceled. The completion message for the command is not returned.
No Socket	z0 6y 05 FF(y: Socket No.)	Returned when no command is executed in a socket specifild by the cancel command, or when an invalid socket number is specified.
Command Not Executable	z0 6y 41 FF(y: Execution command Socket No. Inquiry command: 0)	Returned when a command canot be executed due to current conditions.For example, when commands controlling the focus manually are received during auto focus.

5.1.2 Camera Control Command

Command	Function	Command Packet	Remark
AddressSet	Broadcast	88 30 0p FF	p：Address setting
IF_Clear	Broadcast	88 01 00 01 FF	I/F Clear
CAM _Power	On	8x 01 04 00 02 FF	Power ON/OFF
	Off	8x 01 04 00 03 FF	
CAM_Zoom	Stop	8x 01 04 07 00 FF	
	Tele(Standard)	8x 01 04 07 02 FF	
	Wide(Standard)	8x 01 04 07 03 FF	
	Tele(Variable)	8x 01 04 07 2p FF	p = 0(low) - 7(high)
	Wide(Variable)	8x 01 04 07 3p FF	
	Direct	8x 01 04 47 0p 0q 0r 0s FF	pqrs: Zoom Position
CAM _Focus	Stop	8x 01 04 08 00 FF	
	Far(Standard)	8x 01 04 08 02 FF	
	Near(Standard)	8x 01 04 08 03 FF	

Command	Function	Command Packet	Remark
	Far(Variable)	8x 01 04 08 2p FF	p = 0(low) - 7(high)
	Near (Variable)	8x 01 04 08 3p FF	
	Direct	8x 01 04 48 0p 0q 0r 0s FF	pqrs: Focus Position
	Auto Focus	8x 01 04 38 02 FF	
	Manual Focus	8x 01 04 38 03 FF	
	One Push mode	8x 01 04 38 04 FF	
	One Push Triger	8x 01 04 18 01 FF	One Push Triger
CAM _Zoom Focus	Direct	8x 01 04 47 0p 0q 0r 0s 0t 0u 0v 0w FF	pqrs: Zoom Position tuvw: Focus Position
CAM_AF Sensitivity	High	8x 01 04 58 01 FF	Focus sensitivity Setting
	Normal	8x 01 04 58 02 FF	
	Low	8x 01 04 58 03 FF	
CAM_AF Zone	Front	8x 01 04 AA 00 FF	Focus Region Setting
	Beting	8x 01 04 AA 01 FF	
	Meeting	8x 01 04 AA 02 FF	
	Education	8x 01 04 AA 03 FF	
	Moving	8x 01 04 AA 04 FF	
	Middle	8x 01 04 AA 05 FF	
CAM_WB	Auto	8x 01 04 35 00 FF	
	3000K	8x 01 04 35 01 FF	
	4000k	8x 01 04 35 02 FF	
	One Push mode	8x 01 04 35 03 FF	
	5000k	8x 01 04 35 04 FF	
	Manual	8x 01 04 35 05 FF	

Command	Function	Command Packet	Remark
	6500k	8x 01 04 35 06 FF	
	3500K	8x 01 04 35 07 FF	
	4500K	8x 01 04 35 08 FF	
	5500K	8x 01 04 35 09 FF	
	6000K	8x 01 04 35 0A FF	
	7000K	8x 01 04 35 0B FF	
	One Push Trigger	8x 01 04 10 05 FF	One Push WB Trigger(Enabled during One Push WB mode)
CAM_AWB Sensitivity	Low	8x 01 04 A9 00 FF	WB Sensitivity Setting
	Normal	8x 01 04 A9 01 FF	
	High	8x 01 04 A9 02 FF	
CAM _RGain	Reset	8x 01 04 03 00 FF	Manual Control of R Gain
	Up	8x 01 04 03 02 FF	
	Down	8x 01 04 03 03 FF	
	Direct	8x 01 04 43 00 00 0p 0q FF	pq: R Gain
CAM_ Bgain	Reset	8x 01 04 04 00 FF	Manual Control of B Gain
	Up	8x 01 04 04 02 FF	
	Down	8x 01 04 04 03 FF	
	Direct	8x 01 04 44 00 00 0p 0q FF	pq: B Gain
CAM_AE	Full Auto	8x 01 04 39 00 FF	Automatic Exposure mode
	Manual	8x 01 04 39 03 FF	Manual Control mode
	Shutter priority	8x 01 04 39 0A FF	Shutter Priority Automatic Exposure mode

Command	Function	Command Packet	Remark
	Iris priority	8x 01 04 39 0B FF	Iris Priority Automatic Exposure mode
	Bright	8x 01 04 39 0D FF	Bright mode
CAM_Shutter	Reset	8x 01 04 0A 00 FF	Shutter Setting
	Up	8x 01 04 0A 02 FF	
	Down	8x 01 04 0A 03 FF	
	Direct	8x 01 04 4A 00 00 0p 0q FF	pq: Shutter Position
CAM_Iris	Reset	8x 01 04 0B 00 FF	Iris Setting
	Up	8x 01 04 0B 02 FF	
	Down	8x 01 04 0B 03 FF	
	Direct	8x 01 04 4B 00 00 0p 0q FF	pq: Iris Position
CAM_Gain Limit	Reset	8x 01 04 0C 00 FF	Gain Limit Setting
	Up	8x 01 04 0C 02 FF	
	Down	8x 01 04 0C 03 FF	
	Gain Limit	8x 01 04 2C 0p FF	p: Gain Positon
CAM_Bright	Reset	8x 01 04 0D 00 FF	Bright Setting
	Up	8x 01 04 0D 02 FF	
	Down	8x 01 04 0D 03 FF	
	Direct	8x 01 04 4D 00 00 0p 0q FF	pq: Bright Positon
CAM_ExpComp	On	8x 01 04 3E 02 FF	Exposure Compensation ON/OFF
	Off	8x 01 04 3E 03 FF	
	Reset	8x 01 04 0E 00 FF	Exposure Compensation Amount Setting
	Up	8x 01 04 0E 02 FF	
	Down	8x 01 04 0E 03 FF	

Command	Function	Command Packet	Remark
	Direct	8x 01 04 4E 00 00 0p 0q FF	pq: ExpComp Position
CAM_Back Light	On	8x 01 04 33 02 FF	Back Light Compensation
	Off	8x 01 04 33 03 FF	
CAM_WDRStrength	Reset	8x 01 04 21 00 FF	WDR Level Setting
	Up	8x 01 04 21 02 FF	
	Down	8x 01 04 21 03 FF	
	Direct	8x 01 04 51 00 00 00 0p FF	p: WDR Level Positon
CAM_NR	2D	8x 01 04 53 0p FF	P=0-7 0:OFF
	3D	8x 01 04 54 0p FF	P=0-8 0:OFF
CAM_Gamma		8x 01 04 5B 0p FF	p = 0 – 4 0：Default 1：0.45 2：0.50 3：0.55 4：0.63
CAM_Low-Light Mode	ON	8x 01 04 2D 01 FF	Low-Light Mode Setting
	OFF	8x 01 04 2D 00 FF	
CAM_Gain		8x 01 04 4C 00 00 0p 0q FF	pq：0-20
CAM PresetSpeed		8x 01 01 0p FF	p：1-10
CAM_Flicker	OFF	8x 01 04 23 00 FF	OFF
	50HZ	8x 01 04 23 01 FF	50HZ
	60HZ	8x 01 04 23 02 FF	60HZ
CAM_Aperture	Reset	8x 01 04 02 00 FF	Aperture Control
	Up	8x 01 04 02 02 FF	
	Down	8x 01 04 02 03 FF	

Command	Function	Command Packet	Remark
	Direct	8x 01 04 42 00 00 0p 0q FF	pq: Aperture Gain
CAM_Picture effect	B&W-Mode	8x 01 04 63 04 FF	Picture effect Setting
	OFF	8x 01 04 63 00 FF	
CAM_Memory	Reset	8x 01 04 3F 00 pq FF	pq: Memory Number(=0 to 254) Corresponds to 0 to 9 on the Remote Commander
	Set	8x 01 04 3F 01 pq FF	
	Recall	8x 01 04 3F 02 pq FF	
CAM_LR_Reverse	On	8x 01 04 61 02 FF	Image Flip Horizontal ON/OFF
	Off	8x 01 04 61 03 FF	
CAM_Picture Flip	On	8x 01 04 66 02 FF	Image Flip Vertical ON/OFF
	Off	8x 01 04 66 03 FF	
CAM_ColorSaturation	Direct	8x 01 04 49 00 00 00 0p FF	P=0-E 0:60% 1:70% 2:80% 3:90% 4:100% 5:110% 6:120% 7:130% 8:140% 9:150% 10:160% 11:160% 12:180% 13:190% 14:200%
CAM_IDWrite		8x 01 04 22 0p 0q 0r 0s FF	pqrs: Camera ID (=0000 to FFFF)
SYS_Menu	ON	8x 01 06 06 02 FF	Turn on the menu screen
	OFF	8x 01 06 06 03 FF	Turn off the menu screen
IR_Receive	ON	8x 01 06 08 02 FF	IR(remote commander)receive On/Off
	OFF	8x 01 06 08 03 FF	

Command	Function	Command Packet	Remark
CAM_Setting Reset	Reset	8x 01 04 A0 10 FF	Reset Factory Setting
CAM_Brightness	Direct	8x 01 04 A1 00 00 0p 0q FF	pq: Brightness Position
CAM_Contrast	Direct	8x 01 04 A2 00 00 0p 0q FF	pq: Contrast Position
CAM_Flip	OFF	8x 01 04 A4 00 FF	Single Command For Video Flip
	Flip-H	8x 01 04 A4 01 FF	
	Flip-V	8x 01 04 A4 02 FF	
	Flip-HV	8x 01 04 A4 03 FF	
CAM_VideoSystem	Set Camera video system	8x 01 06 35 00 0p FF	P: 0~E Video format 0: 4KP30, 1: 4KP25, 2: 1080P30, 3: 1080P25, 4: 1080P29.97
Pan_tiltDrive	Up	8x 01 06 01 VV WW 03 01 FF	VV: Pan speed 0x01 (low speed) to 0x18 (high speed) WW: Tilt speed 0x01 (low speed) to 0x14 (high speed) YYYY: Pan Position ZZZZ: Tilt Position
	Down	8x 01 06 01 VV WW 03 02 FF	
	Left	8x 01 06 01 VV WW 01 03 FF	
	Right	8x 01 06 01 VV WW 02 03 FF	
	Upleft	8x 01 06 01 VV WW 01 01 FF	
	Upright	8x 01 06 01 VV WW 02 01 FF	

Command	Function	Command Packet	Remark
	DownLeft	8x 01 06 01 VV WW 01 02 FF	
	DownRight	8x 01 06 01 VV WW 02 02 FF	
	Stop	8x 01 06 01 VV WW 03 03 FF	
	AbsolutePosition	8x 01 06 02 VV WW 0Y 0Y 0Y 0Y 0Z 0Z 0Z 0Z FF	
	RelativePosition	8x 01 06 03 VV WW 0Y 0Y 0Y 0Y 0Z 0Z 0Z 0Z FF	
	Home	8x 01 06 04 FF	
	Reset	8x 01 06 05 FF	
Pan-tilt LimitSet	Set	8x 01 06 07 00 0W 0Y 0Y 0Y 0Y 0Z 0Z 0Z 0Z FF	W:1 Up Right 0:DownLeft YYYY: Pan Limit Position(TBD) ZZZZ: Tilt Limit Position(TBD)
	Clear	8x 01 06 07 01 0W 07 0F 0F 0F 07 0F 0F 0F FF	

5.1.3 Inquiry Command

Command	Command Packet	Return Packet	Remark
CAM_PowerInq	8x 09 04 00 FF	y0 50 02 FF	On
		y0 50 03 FF	Off(Standby)

Command	Command Packet	Return Packet	Remark
CAM_ZoomPosInq	8x 09 04 47 FF	y0 50 0p 0q 0r 0s FF	pqrs: Zoom Position
CAM_FocusAFModeInq	8x 09 04 38 FF	y0 50 02 FF	Auto Focus
		y0 50 03 FF	Manual Focus
		y0 50 04 FF	One Push mode
CAM_FocusPosInq	8x 09 04 48 FF	y0 50 0p 0q 0r 0s FF	pqrs: Focus Position
CAM_AFSensitivityInq	8x 09 04 58 FF	y0 50 01 FF	High
		y0 50 02 FF	Normal
		y0 50 03 FF	Low
CAM_AFZoneInq	8x 09 04 AA FF	y0 50 00 FF	Front
		y0 50 01 FF	Beting
		y0 50 02 FF	Meeting
		y0 50 03 FF	Education
		y0 50 04 FF	Moving
		y0 50 05 FF	Middle
CAM_WBModeInq	8x 09 04 35 FF	y0 50 00 FF	Auto
		y0 50 01 FF	3000K
		y0 50 02 FF	4000K
		y0 50 03 FF	One Push Mode
		y0 50 04 FF	5000K
		y0 50 05 FF	Manual
		y0 50 00 FF	6500K
		y0 50 06 FF	6500K
		y0 50 07 FF	3500K

Command	Command Packet	Return Packet	Remark
		y0 50 08 FF	4500K
		y0 50 09 FF	5500K
		y0 50 0A FF	6000K
		y0 50 0B FF	7000K
CAM_AWBSensitivityInq	8x 09 04 A9 FF	y0 50 00 FF	Low
		y0 50 01 FF	Normal
		y0 50 02 FF	High
CAM_RGainInq	8x 09 04 43 FF	y0 50 00 00 0p 0q FF	pq: R Gain
CAM_BGainInq	8x 09 04 44 FF	y0 50 00 00 0p 0q FF	pq: B Gain
CAM_AEModeInq	8x 09 04 39 FF	y0 50 00 FF	Full Auto
		y0 50 03 FF	Manual
		y0 50 0A FF	Shutter priority
		y0 50 0B FF	Iris priority
		y0 50 0D FF	Bright
CAM_ShutterPosInq	8x 09 04 4A FF	y0 50 00 00 0p 0q FF	pq: Shutter Position
CAM_IrisPosInq	8x 09 04 4B FF	y0 50 00 00 0p 0q FF	pq: Iris Position
CAM_GainLimitInq	8x 09 04 2C FF	y0 50 0p FF	p: Gain Positon
CAM_BrightPosiInq	8x 09 04 4D FF	y0 50 00 00 0p 0q FF	pq: Bright Position
CAM_ExpCompModeInq	8x 09 04 3E FF	y0 50 02 FF	On
		y0 50 03 FF	Off
CAM_ExpCo	8x 09 04 4E FF	y0 50 00 00 0p 0q	pq: ExpComp Position

Command	Command Packet	Return Packet	Remark
mpPosInq		FF	
CAM_BacklightModeInq	8x 09 04 33 FF	y0 50 02 FF	On
		y0 50 03 FF	Off
CAM_WDRStrengthInq	8x 09 04 51 FF	y0 50 00 00 00 0p FF	p: WDR Strength
CAM_NRLevel(2D) Inq	8x 09 04 53 FF	y0 50 0p FF	P: 2DNRLevel
CAM_NRLevel(3D) Inq	8x 09 04 54 FF	y0 50 0p FF	P:3D NRLevel
CAM_FlickerModeInq	8x 09 04 55 FF	y0 50 0p FF	p: Flicker Settings(0: OFF, 1: 50Hz, 2:60Hz)
CAM_ApertureInq	8x 09 04 42 FF	y0 50 00 00 0p 0q FF	pq: Aperture Gain
CAM_PictureEffectModeInq	8x 09 04 63 FF	y0 50 00 FF	Off
		y0 50 04 FF	B&W
CAM_Memory Inq	8x 09 04 3F FF	y0 50 0p FF	p: Memory number last operated.
SYS_MenuModeInq	8x 09 06 06 FF	y0 50 02 FF	On
		y0 50 03 FF	Off
CAM_LR_ReverseInq	8x 09 04 61 FF	y0 50 02 FF	On
		y0 50 03 FF	Off
CAM_PictureFlipInq	8x 09 04 66 FF	y0 50 02 FF	On
		y0 50 03 FF	Off
CAM_ColorSaturationInq	8x 09 04 49 FF	y0 50 00 00 00 0p FF	p: Color Gain setting 0h (60%) to Eh (130%)
CAM_IDInq	8x 09 04 22 FF	y0 50 0p FF	p: Camera ID
IR_ReceiveInq	8x 09 06 08 FF	y0 50 02 FF	On

Command	Command Packet	Return Packet	Remark
		y0 50 03 FF	Off
CAM_BrightnessInq	8x 09 04 A1 FF	y0 50 00 00 0p 0q FF	pq: Brightness Position
CAM_ContrastInq	8x 09 04 A2 FF	y0 50 00 00 0p 0q FF	pq: Contrast Position
CAM_FlipInq	8x 09 04 A4 FF	y0 50 00 FF	Off
		y0 50 01 FF	Flip-H
		y0 50 02 FF	Flip-V
		y0 50 03 FF	Flip-HV
CAM_GammaInq	8x 09 04 5B FF	y0 50 0p FF	p: Gamma setting
CAM_VersionInq	8x 09 00 02 FF	y0 50 ab cd mn pq rs tu vw FF	ab cd : vender ID (0220) mn pq : model ID rs tu： ARM Version vw： reserve
VideoSystemInq	8x 09 06 23 FF	y0 50 0p FF	P: 0~E Video format 0: 4KP30, 1: 4KP25, 2: 1080P30, 3: 1080P25, 4: 1080P29.97
Pan-tiltMaxSpeedInq	8x 09 06 11 FF	y0 50 ww zz FF	ww: Pan Max Speed zz: Tilt Max Speed

Command	Command Packet	Return Packet	Remark
Pan-tiltPosInq	8x 09 06 12 FF	y0 50 0w 0w 0w 0w 0z 0z 0z 0z FF	wwww: Pan Position zzzz: Tilt Position

Note: [x] in the above table represents the address of the device to be operated, [y]=[x + 8].

5.2 Pelco-D Protocol Command List

Function	Byte1	Byte2	Byte3	Byte4	Byte5	Byte6	Byte7
Up	0xFF	Address	0x00	0x08	Pan Speed	Tilt Speed	SUM
Down	0xFF	Address	0x00	0x10	Pan Speed	Tilt Speed	SUM
Left	0xFF	Address	0x00	0x04	Pan Speed	Tilt Speed	SUM
Right	0xFF	Address	0x00	0x02	Pan Speed	Tilt Speed	SUM
Upleft	0xFF	Address	0x00	0x0C	Pan Speed	Tilt Speed	SUM
Upright	0xFF	Address	0x00	0x0A	Pan Speed	Tilt Speed	SUM
DownLeft	0xFF	Address	0x00	0x14	Pan Speed	Tilt Speed	SUM
DownRight	0xFF	Address	0x00	0x12	Pan Speed	Tilt Speed	SUM
Zoom In	0xFF	Address	0x00	0x20	0x00	0x00	SUM
Zoom Out	0xFF	Address	0x00	0x40	0x00	0x00	SUM
Focus Far	0xFF	Address	0x00	0x80	0x00	0x00	SUM
Focus Near	0xFF	Address	0x01	0x00	0x00	0x00	SUM
Stop	0xFF	Address	0x00	0x00	0x00	0x00	SUM

Function	Byte1	Byte2	Byte3	Byte4	Byte5	Byte6	Byte7
Set Preset	0xFF	Address	0x00	0x03	0x00	Preset ID	SUM
Clear Preset	0xFF	Address	0x00	0x05	0x00	Preset ID	SUM
Call Preset	0xFF	Address	0x00	0x07	0x00	Preset ID	SUM
Query Pan Position	0xFF	Address	0x00	0x51	0x00	0x00	SUM
Query Pan Position Response	0xFF	Address	0x00	0x59	Value High Byte	Value Low Byte	SUM
Query Tilt Position	0xFF	Address	0x00	0x53	0x00	0x00	SUM
Query Tilt Position Response	0xFF	Address	0x00	0x5B	Value High Byte	Value Low Byte	SUM
Query Zoom Position	0xFF	Address	0x00	0x55	0x00	0x00	SUM
Query Zoom Position Response	0xFF	Address	0x00	0x5D	Value High Byte	Value Low Byte	SUM

5.3 Pelco-P Protcol Command List

Function	Byte1	Byte2	Byte 3	Byte 4	Byte5	Byte6	Byte 7	Byte 8
Up	0xA0	Address	0x00	0x08	Pan Speed	Tilt Speed	0xAF	XOR
Down	0xA0	Address	0x00	0x10	Pan Speed	Tilt Speed	0xAF	XOR
Left	0xA0	Address	0x00	0x04	Pan Speed	Tilt Speed	0xAF	XOR
Right	0xA0	Address	0x00	0x02	Pan Speed	Tilt Speed	0xAF	XOR
Upleft	0xA0	Address	0x00	0x0C	Pan Speed	Tilt Speed	0xAF	XOR
Upright	0xA0	Address	0x00	0x0A	Pan Speed	Tilt Speed	0xAF	XOR
DownLeft	0xA0	Address	0x00	0x14	Pan Speed	Tilt Speed	0xAF	XOR
DownRight	0xA0	Address	0x00	0x12	Pan Speed	Tilt Speed	0xAF	XOR
Zoom In	0xA0	Address	0x00	0x20	0x00	0x00	0xAF	XOR
Zoom Out	0xA0	Address	0x00	0x40	0x00	0x00	0xAF	XOR
Stop	0xA0	Address	0x00	0x00	0x00	0x00	0xAF	XOR
Focus Far	0xA0	Address	0x01	0x00	0x00	0x00	0xAF	XOR
Focus Near	0xA0	Address	0x02	0x00	0x00	0x00	0xAF	XOR
Set Preset	0xA0	Address	0x00	0x03	0x00	Preset ID	0xAF	XOR
Clear Preset	0xA0	Address	0x00	0x05	0x00	Preset ID	0xAF	XOR
Call Preset	0xA0	Address	0x00	0x07	0x00	Preset ID	0xAF	XOR
Query Pan Position	0xA0	Address	0x00	0x51	0x00	0x00	0xAF	XOR

Query Pan Position Response	0xA0	Address	0x00	0x59	Value High Byte	Value Low Byte	0xAF	XOR
Query Tilt Position	0xA0	Address	0x00	0x53	0x00	0x00	0xAF	XOR
Query Tilt Position Response	0xA0	Address	0x00	0x5B	Value High Byte	Value Low Byte	0xAF	XOR
Query Zoom Position	0xA0	Address	0x00	0x55	0x00	0x00	0xAF	XOR
Query Zoom Position Response	0xA0	Address	0x00	0x5D	Value High Byte	Value Low Byte	0xAF	XOR

6. Maintenance and Troubleshooting

6.1 Camera Maintenance

1）If the camera will not be used for a long time, please turn off the power switch.

2）Use a soft cloth or lotion-free tissue to clean the camera body.

3）Use a soft dry lint-free cloth to clean the lens. If the camera is very dirty, clean it with a diluted neutral detergent. Do not use any type of solvent or harsh detergent, which may damage the surface.

6.2 Unqualified Applications

● Do not shoot extremely bright objects for a long period of time, such as sunlight, ultra-bright light sources, etc...

● Do not operate in unstable lighting conditions, otherwise the image may flicker.

● Do not operate close to powerful electromagnetic radiation, such as TV or radio transmitters, etc…

6.3 Troubleshooting

● **No image**

1. Check whether the power cord is connected, voltage is OK, POWER lamp is lit.

2. Check whether the camera can “self-test” after startup (camera will do a brief pan-tilt tour and return to the home position, or if preset 0 is set, the camera will return to the preset 0 position).

3. Check that the HDMI cable is connected correctly.

1. If HDMI, make sure that the destination device is accessing the HDMI port that you plugged into.

2. If SDI, make sure that the destination device is accessing the SDI port that you plugged into.

● **Abnormal display of image**

1. Check setting of rotary dial on rear of camera. Be sure to use a resolution and refresh rate that is supported by your software.

● **Image is shaky or vibrating.**

1. Check whether camera is mounted solidly or sitting on a steady horizontal and level surface.

2. Check the building and any supporting furniture for vibration. Ceiling mounts are often affected by building vibration more than wall mounts.

3. Any external vibration that is affecting the camera will be more apparent when in tele zoom (zoomed in) setting.

Copyright Notice

The entire contents of this manual, whose copyright belongs to Minrray Industry Co.,Ltd, may not be cloned, copied or translated in any way without the explicit permission of the company. Product specifications and information referred to in this document are for reference only and as such are subject to updating at any time without prior notice