ProLite TW2424AS-B3P

TOUCHSCREENS

INFORMATION

24” Full HD In-cell PCAP 10pt interactive Touch Panel PC with Android OS, IPS panel technology, anti glare coating, PoE Technology and iiSignage²

The ProLite TW2424AS-B3P interactive Touchpanel-PC is a perfect choice for high-use environments. The IPS panel, integrated in a slim and elegant bezel, delivers both excellent colour performance with wide viewing angles and noticeably sharper images. The In-cell 10tp PCAP touch technology ensures a fluid and natural touch experience. This monitor can operate in landscape, portrait and face-up orientation in 24/7 operating time.

Thanks to the pre-installed Android 14 operating system, it is possible to easily customize the monitor by installing applications directly to it. In combination with the 32GB storage, Wi-Fi connection, LAN (RJ45) and Bluetooth connectors, it makes the monitor especially suited for POS systems or information points in retail shops to educate customers about your products, as well as virtually limitless smart home applications. Thanks to Power over Ethernet (PoE), both power and data are delivered through a single cable, simplifying installation and reducing additional cables.

Additionally, it integrates effortlessly with iiSignage², iiyama’s Content Management System (CMS), giving you full control over your messages and advertising.

Elegant Design meets Smooth Interaction

Elegant by design, vibrant in every detail and smooth response to every touch. With its slim, modern appearance and crisp, vivid colors, it creates an engaging user experience while blending naturally into a wide range of environments. Its flexible, app-ready platform also makes it easy to tailor the display to different applications, from retail and information points to showrooms, hospitality and interactive installations.

Connectivity

The RJ45 (LAN) connector supporting Power over Ethernet technology (POE) allows to provide both data connection and power by a single cable, which simplifies installation in areas where many cables would interfere with the environment.

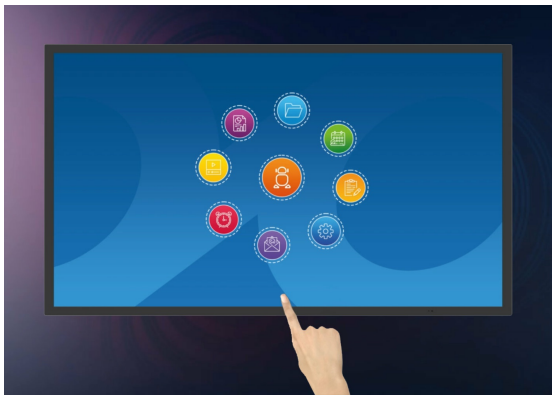

Android OS

Thanks to Android OS, you can easily customize the display to your needs by installing applications directly to it.

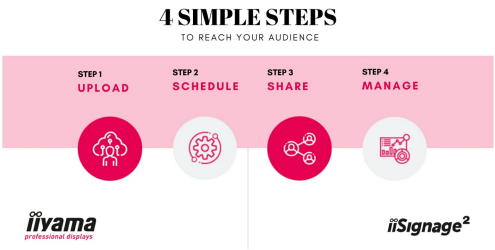

iiSignage²

iiSignage² is our digital signage content management platform to easily show and control your content and to manage your displays in a secure way. The Content Management System (CMS) gives you total control of your messaging and advertising remotely and safely.

SPECIFICATION

01 DISPLAY CHARACTERISTICS

Design	Thin bezel
Diagonal	23.8", 60.5cm
Panel	IPS
Native resolution	1920 x 1080 (2 megapixel HD)
Aspect ratio	16:9
Brightness	450 cd/m² with touch
Static contrast	1000:1 with touch
Response time (GTG)	14ms
Viewing zone	horizontal/vertical: 178°/178°, right/left: 89°/89°, up/down: 89°/89°
Colour support	16.7mln 8bit
Horizontal Sync	31. - 83.kHz
Viewable area W x H	527 x 296.5mm
Pixel pitch	0.275mm
Bezel colour and finish	black, matte

02 TOUCH

Touch technology	InCell PCAP
Touch points	10 (HID, only supported by integrated OS, external OS only support single touch)
Touch method	finger, glove (latex), capacitive stylus
Touch interface	USB

03 INTERFACES / CONNECTORS / CONTROLS

Digital signal input	HDMI x1 (1920x1080 @60Hz)
Digital signal output	USB-C x1 (1x v. 3.2 (Gen 1, 5Gbit, video output and touch board function – mirror screen))
Audio output	Speakers 2 x 5W
HDCP	yes
USB ports	x2 (1x v. 3.2 (Gen 1, 5Gbit; DC5V, 900mA), 1x 2.0 (DC5V, 500mA))
RJ45 (LAN)	x1 (PoE - IEEE802.3bt/72W (10/100/1000M))
Microphone	x1 (Dual Microphone)

04 FEATURES

Integrated software	Android 14 with GMS
SOC	Octa-core RK3576 (4x A53 + 4x A72)
GPU	ARM G52 MC3
Storage	32GB eMMC

Memory	4GB LPDDR4
WiFi	IEEE802.11ax/ac/a//b/g/n
Bluetooth	5.3
Extra	auto-rotation, 2x5W speakers, dual microphone, anti-glare coating, hard coatung 3H, PoE, iiSignage²
Max. non-stop operating time	24/7
Anti image retention	yes
Glass hardness	6H
OSD key lock	yes

05 GENERAL

Control buttons	Power switch, volume/ button +, volume/ button -
Applications	Applications: lock application, manage restart time, manage power on/off time, calculator, calendar, Chrome, alarm/clock/timer/stopwatch, manage files & folders, organize albums, Gmail, Google, iiSignage², play audio files, Play store, system peferences, sound recorder, play video
Flicker free	yes

06 MECHANICAL

Orientation	landscape, portrait, face-up
VESA mounting	100 x 100mm
Cable management system	yes
MTBF	50000 hours (excluding backlight)

07 ACCESSORIES INCLUDED

Cables	power (1.8m)
Guides	quick start guide, safety guide
Other	AC adapter
Cable cover	yes

08 POWER MANAGEMENT

Power supply unit	external
Power supply	DC 12 V
Power usage	17.5W typical, 0.5W stand by, 0.3W off mode

09 SUSTAINABILITY

Regulations	CE, EAC, RoHS support, ErP, WEEE, REACH, UKCA
REACH SVHC	above 0.1%: Lead

10 DIMENSIONS / WEIGHT

Product dimensions W x H x D	550 x 336 x 28mm
Box dimensions W x H x D	640 x 410 x 121mm
Weight (without box)	4.24kg
Weight (with box)	6.2kg
EAN code	4948570127153

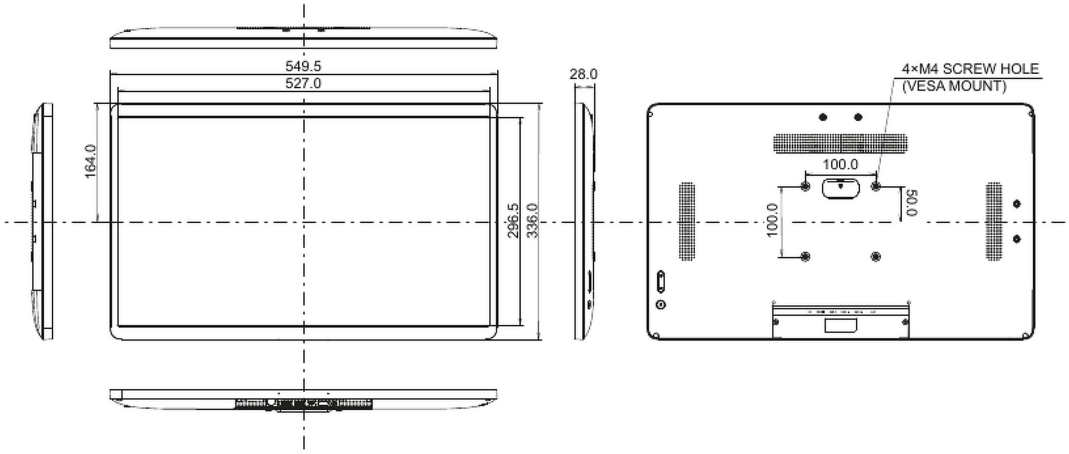

GALLERY

All trademarks and registered trademarks acknowledged. E & O E. Specification subject to change without notice. All LCD's comply with ISO-9241-307:2008 in connection with pixel defects. **© IIYAMA CORPORATION. ALL RIGHTS RESERVED**