ENGLISH

OWNER'S MANUAL

LG Digital Signage
(MONITOR)

Please read the user manual before using this product to ensure safe and convenient use.

105TR5WP-B
105TR5WP-I

www.lg.com

Copyright © 2024 LG Electronics Inc. All Rights Reserved.

Table of Contents

Getting to Know the Product 3

Checking Components 3

Checking Optional Components 5

Installing the Product 6

Installing on Wall 6

Checking Wall Mount Support Specifications 6

Installing the Product 7

Connecting to Power 8

Exploring the Product 9

Names of Each Part 9

Front 9

Back 10

Side 11

Checking the Input/Output Terminals 12

Front Cable Terminal 12

Bottom Cable Terminal 13

Side Cable Terminal 14

Using the Touch Pen 15

Getting to Know the Touch Pen Functions 15

Storing the Pen 16

Replacing the Pen Tip 16

Using the Wi-Fi Module 17

Installation Procedure 17

Feature 17

Precautions for Use 18

Glass Breakage 18

Dust 18

Afterimage 18

Recommended Usage Condition 19

Product Specifications 20

Touch screen 21

Speaker 21

Specifications by Model 22

Resolution 23

HDMI / USB Type-C / DP Supported Mode 23

Wireless module Specifications 25

Licence 26

WARNING - This equipment is compliant with Class A of CISPR 32. In a residential environment this equipment may cause radio interference.

Getting to Know the Product

Checking Components

An electronic blackboard is a display product that can be used by touching the screen. A touch pen, remote control and others are provided with the product. If any of the listed components are missing, contact customer support. LG Electronics also sells optional components that can help you use the product more effectively as separate purchases.

Product specifications or components may change without prior notice according to the quality improvements or feature upgrades.

Caution

- To ensure user safety and product longevity, do not use counterfeit products. If the product is damaged as a result of using counterfeits, the warranty does not apply. In such cases, the user cannot be compensated even if injured.
- If the product is used in an environment with excessive dust, the warranty does not apply.

Note

- Remove all tapes attached to the front before connecting the product to power.
- Cables used when connecting to external devices must be purchased separately.
- Keep the product box and do not discard it. It can be used when moving the product.

Checking Components

Electronic blackboard

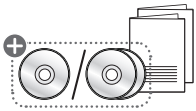

User manual and warranty

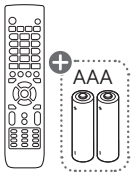

Remote control and batteries (AAA, 2 pieces)

HDMI cable

Power cable

TOUCH cable

USB Type-C cable

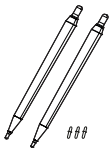

Touch pens and pen tips

Wi-Fi Module

Note

- ⊕ : Availability may vary depending on your geographic location.
- The components provided in the box may vary depending on the region and model.
- Component images shown in the user manual are for the user's understanding and may differ from actual components.

Checking Optional Components

Optional components may change without prior notice to improve product performance. New components may be added.

Note

- All optional components are separate purchases. Contact LG Electronics if you wish to purchase them.
- Component images shown in the user manual are for the user's understanding and may differ from actual components.

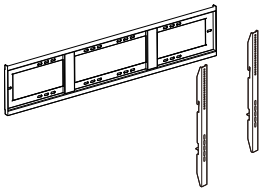

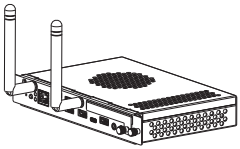

Wall Mount Holder	OPS

Note

- After connecting the cable to the port, mount the OPS (Open Pluggable Specification) PC.

Installing the Product

Installing on Wall

The electronic blackboard can be used in a wall-mounted format by securing it to a wall. To install it on a wall, first attach a wall mount support (optional) to the back of the product body.

The wall mount support is a separate purchase and can be purchased from a nearby dealer. For more information on installing a wall mount support, see the installation guide provided with your wall mount support purchase.

Checking Wall Mount Support Specifications

When installing a wall mount support, you must use screws and brackets that comply with VESA (Video Electronics Standards Association) standard specifications.

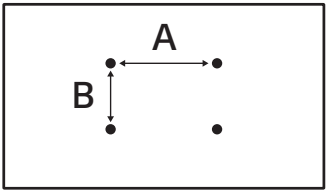

Model Name	VESA Dimensions (A x B) (mm)	Screw Specifications	Maximum Length (mm)	Quantity
105TR5WP-B 105TR5WP-I	1000 x 600	M8	25	4

Caution

- Disconnect the power cord first before moving or installing the product. There is risk of electric shock.
- Do not install the product on a ceiling or sloped wall. There is a risk of falling and injury.
- If you tighten the screws too tightly and damage the product, the warranty may not apply.
- Use screws and brackets for wall mounting that meet the VESA standard specifications. The warranty does not apply to the breakage or personal injury due to the use of incorrect components.
- Using screws longer than VESA standard specifications when installing a wall mount support may damage the interior of the product.
  In such cases, we do not take responsibility for any damage or issues that may arise with the product.

Installing the Product

Allow at least 10 cm of clearance from the wall for ventilation, and install the product with care to prevent it from falling. When purchasing a wall mount support, the installation guide and all necessary parts are included. A wall mount support can be purchased separately from a nearby dealer.

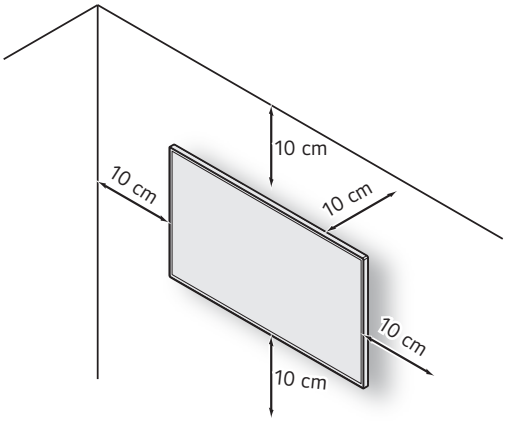

Connecting to Power

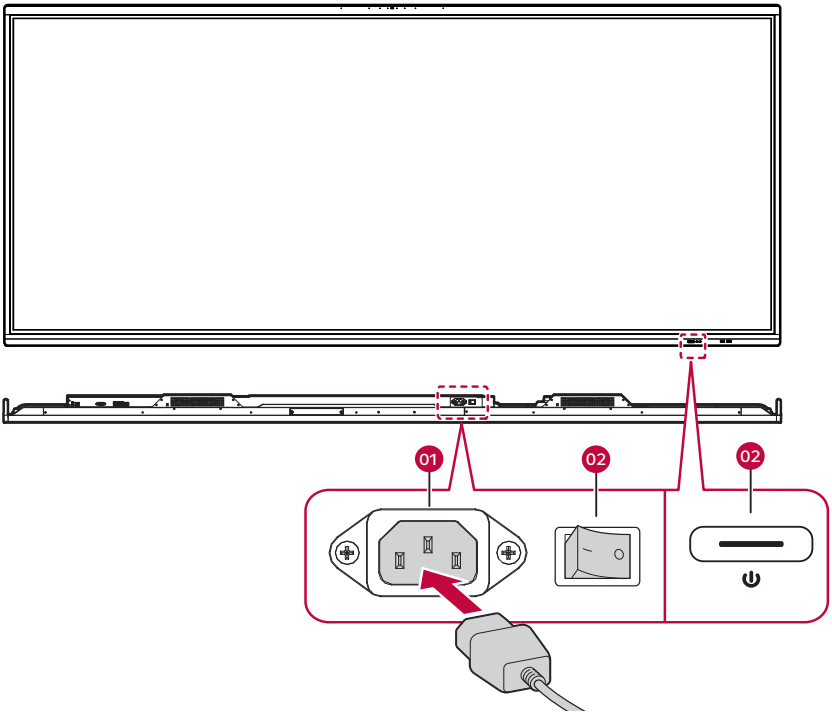

1 Connect the power cable provided as a component to the power terminal at the bottom of the product.

2 Press the power switch on the front of the product or next to the power terminal to turn the power on.

Note

- The screen may flicker if the product is turned on when it is cold. This is normal, so there is no need to worry.

No.	Name	Explanation
01	**Power Cable Terminal**	Connects the power cord.
02	**Power switch**	Turns the power on or off. - "I" means power on, and "O" means power off.

Exploring the Product

Names of Each Part

Front

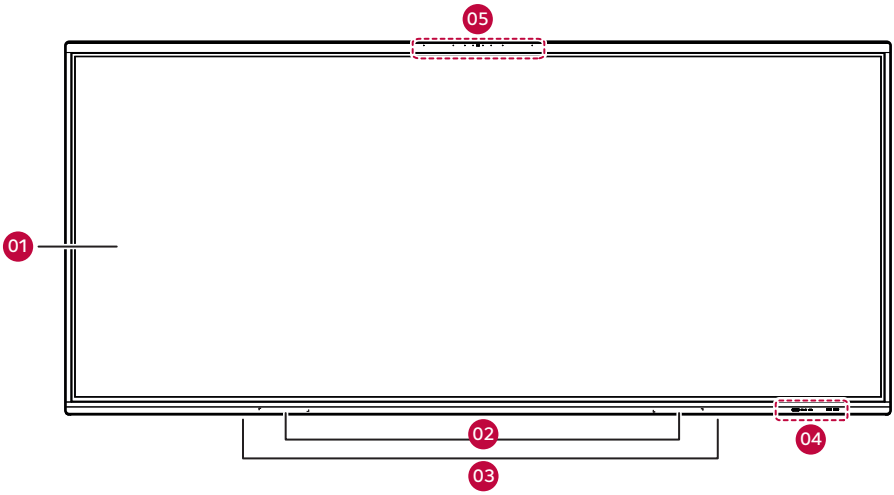

No.	Name	Explanation
01	**Touch screen**	Screen that displays the contents of the electronic blackboard and can be operated by touching it with your hand or with a touch pen.
02	**Touch Pen Holder**	Holds a touch pen by attaching it magnetically.
03	**Speaker**	Outputs the sound. - The woofer is in the back.
04	**Front Cable Terminal**	Terminals that allow you to connect each of the external devices of the following specifications. • ϟ IN (USB Type-C), 3.0 (USB 3.0)
05	**Microphone**	Collects sound when the microphone is on. The white indicator means the microphone is on.

Back

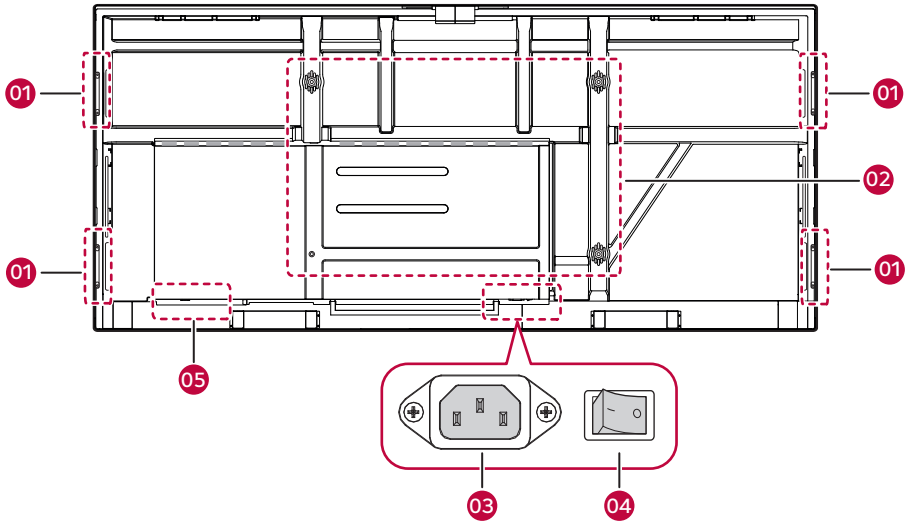

No.	Name	Explanation
01	**Handle for Transportation**	Used for moving the electronic blackboard.
02	**Screw Holes**	Used for mounting the electronic blackboard on a stand or installing it on a wall with a wall mount.
03	**Power Cable Terminal**	Connects the power cord.
04	**Power Sources**	Turns the power on or off.
05	**Bottom Cable Terminal**	Terminals that allow you to connect each of the external devices of the following specifications. • 2.0 (USB 2.0), 2.0 OUT 3, RS232, LAN, SPDIF

Side

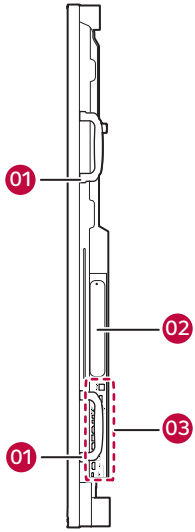

No.	Name	Explanation
01	**Handle for Transportation**	Used for moving the electronic blackboard.
02	**Built-in PC (OPS) Slot**	Inserts the built-in PC (OPS).
03	**Side Cable Terminal**	Terminals that allow you to connect each of the external devices of the following specifications. • 2.0 OUT 1/2, AUDIO, AUDIO OUT, HDMI™ 1/2/3/4, HDMI™ OUT , IN (DP), 3.0 (USB 3.0), ⚡ IN (USB Type-C)

Checking the Input/Output Terminals

Check the location and function of the input/output terminals for connecting external devices to the electronic blackboard.

Front Cable Terminal

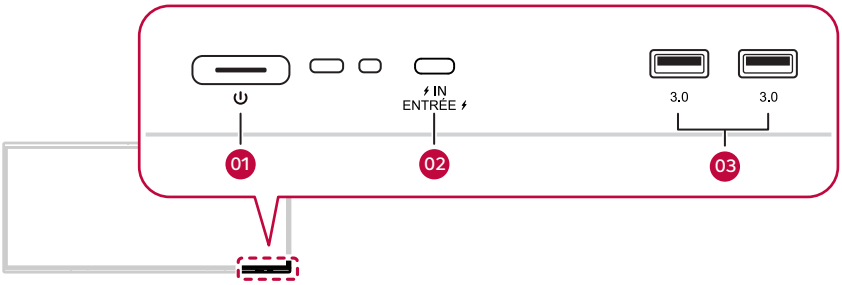

No.	Name	Explanation
01	**Power Sources**	Turns the power on or off.
02	**IN (USB Type-C)**	Used to connect external devices with a USB Type-C cable. Supports charging, data transfer, audio and video output interface expansion, etc.
03	**3.0 (USB 3.0)**	Used for data transfer or connecting USB devices such as a mouse or keyboard with a USB cable.

Bottom Cable Terminal

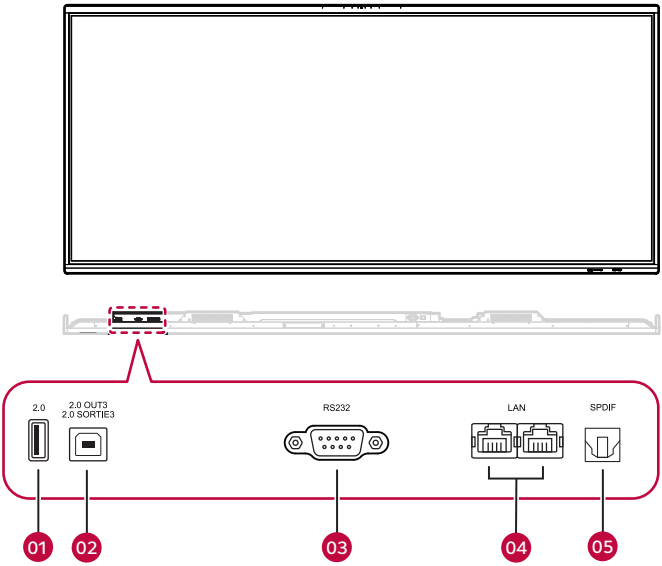

No.	Name	Explanation
01	2.0 (USB 2.0)	Used for data transfer or connecting USB devices such as a mouse or keyboard with a USB cable.
02	2.0 OUT 3	Used to export a device or network to an external device.
03	RS232	Used to connect an RS232 cable.
04	LAN	Used for wired internet connection.
05	SPDIF	Used to output audio to an external device using an SPDIF cable.

Side Cable Terminal

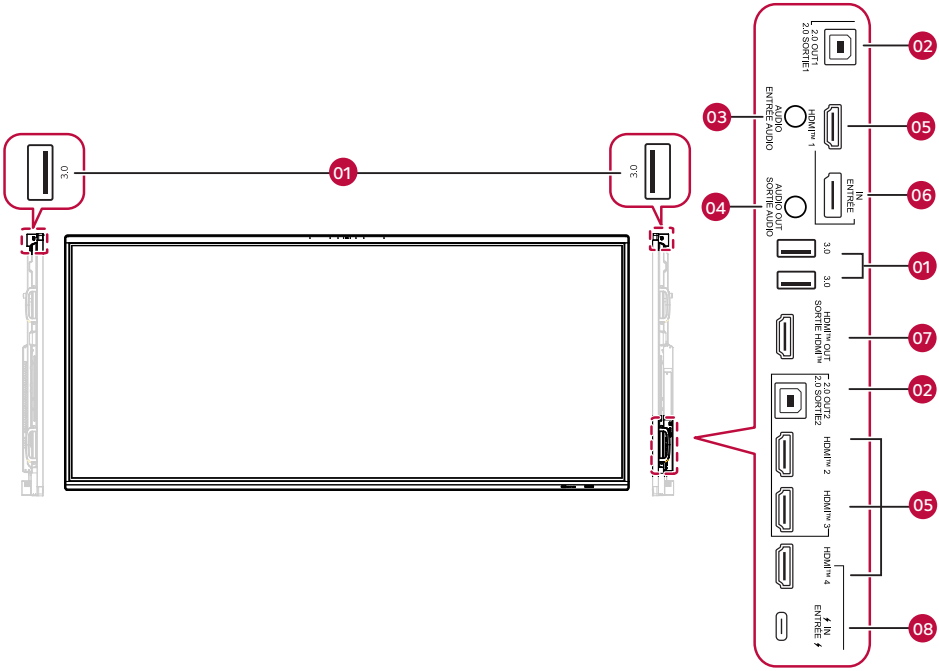

No.	Name	Explanation
01	3.0 (USB 3.0)	Used to transfer data through a USB cable with an Android input or to connect USB devices such as a mouse or keyboard.
02	2.0 OUT 1/2	Used to export a device or network to an external device.
03	AUDIO	Used to input audio from an external device.
04	AUDIO OUT	Used to output audio to an external device.
05	HDMI™ 1/2/3/4	Used to connect external devices with a HDMI cable.
06	IN (DP)	Used to connect external devices with a DP cable.
07	HDMI™ OUT	Used to export the screen to an external device with an HDMI cable.
08	ϟ IN (USB Type-C)	Used to connect external devices with a USB Type-C cable.

Using the Touch Pen

The touch pen can be used for various purposes, such as touching the screen to launch menus or to take notes, annotate, and draw on data.

Getting to Know the Touch Pen Functions

Two pens can be used simultaneously to write or draw together. Different colours can be assigned to each pen.

A pen has a 3 mm and 7 mm tip at each end, allowing you to use two modes separately with one pen.

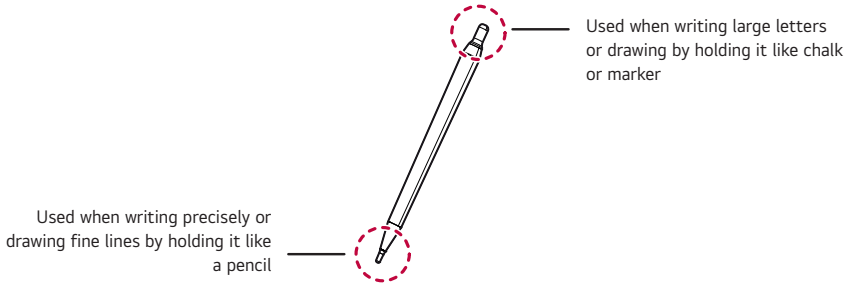

Note

- If you press the pen on the screen for about 2 seconds and release it after you open a built-in PC (OPS), PDF viewer, or Word document, the same pop-up menu as when you right-click on the mouse will appear.

Storing the Pen

The touch pen can be attached to the magnetic touch pen holder to keep it in place, so you don't lose it.

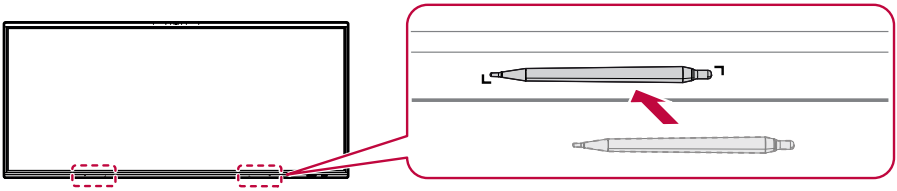

Replacing the Pen Tip

If the touch pen tip is worn or damaged, it must be replaced with a new tip.

1 Remove the old tip by pulling on the end with tools such as tweezers.
2 Slide the new tip into the pen body.

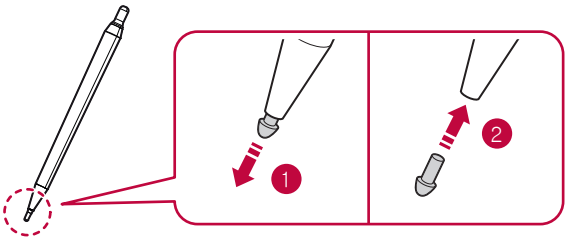

Note

- To purchase additional touch pens or spare tips, contact LG Electronics.

Using the Wi-Fi Module

Installation Procedure

Caution

- Ensure the power cord of the product is disconnected before installation.

1 Unscrew and remove the Wi-Fi module cover located on the bottom of the product.

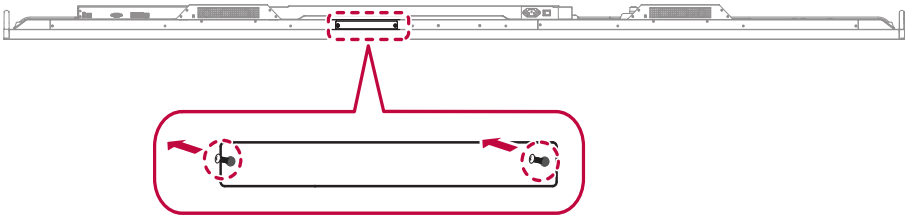

2 Following the direction of the arrow, insert the Wi-Fi module fully into the slot.

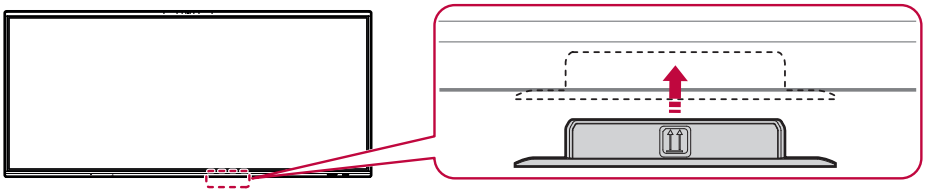

Feature

Once installation is complete, power on the product to automatically activate the Wi-Fi module.

1 Click [Settings] on the screen.

2 Clicking on [Wireless & Network] allows you to turn on and off [Wi-Fi] and [Hotspot] items.

Precautions for Use

Glass Breakage

- Although the screen of this product is made of tempered glass, it may still break as a result of abnormal impact or sudden temperature changes. Spontaneous breakage may also occur during use due to microscopic impurities or flaws in the glass. Always wear protective gear when installing or handling the product, as sharp fragments may be generated if the product is damaged. If damage occurs during use, move everyone nearby to a safe distance immediately to avoid injury from flying fragments.

Dust

The warranty will not cover any damage caused by using the product in an excessively dusty environment.

Afterimage

- After-image appears when the product is turned off.
  - Pixels may be damaged rapidly if a still image is displayed on the screen for a long period of time. Use the screen-saver function.
  - Switching from a screen with high differences in luminance (black and white or grey) to a darker screen may cause an afterimage. This is normal due to the display characteristics of this product.
- When the LCD screen is in a still pattern for extended periods of use, a slight voltage difference may occur between the electrodes that operate the liquid crystal (LC). The voltage difference between the electrodes increases over time and tends to keep the liquid crystal aligned in one direction. At this time, the previous image remains, which is called an afterimage.
- Afterimages do not occur when continuously changing images are used but take place when a certain screen is fixed for a long time. The following are operational recommendations for reducing the occurrence of afterimages when using a fixed screen. The maximum recommended time for switching the screen is 12 hours. Shorter cycles are better for preventing afterimages.

Recommended Usage Condition

1 Change the background colour and text colour at equal intervals.
- Afterimages occur less when the colours to be changed are complementary to one another.

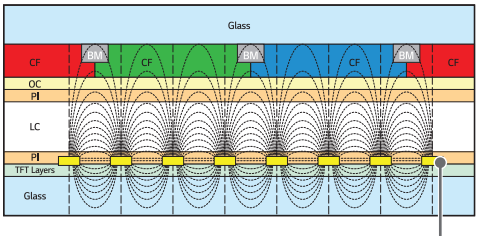

2 Switch the screen at equal time intervals.
- Take caution, and ensure that text or images from before the screen change are not left in the same location after the screen change.

Product Specifications

Without prior notice, all product information and specifications contained in this manual are subject to change to improve the performance of the product.
The ~ symbol means alternating current, and the symbol ⎓ means direct current.

Input/Output Ports	HDMI™ 1/2/3/4, IN, RS232, LAN, 2.0, 3.0, ⚡ IN, 2.0 OUT 1/2/3, HDMI™ OUT, AUDIO, AUDIO OUT, SPDIF, OPS	
Embedded Battery	Not Applied	
Resolution	Recommended Resolution	5120 x 2160 (5K) @ 60 Hz
	Max Resolution	3840 x 2160 @ 60 Hz (HDMI 2.0 / USB Type-C) 5120 x 2160 @ 60 Hz (HDMI 2.1 / DP 1.4) - This may not be supported on some OS or graphics card types.
Environmental Conditions	Operating Temperature	0 °C to 40 °C
	Operating Humidity	10 % to 90 % (Condition for preventing condensation)
	Storage Temperature	-20 °C to 60 °C
	Storage Humidity	10 % to 90 % (Condition for preventing condensation) * Product box packaging storage conditions

Note

- The maximum power rating of the USB Type-C port installed on this product is 100 W. (The rear one is 100 W when OPS is off, the front one is always 15 W.) When using this port to charge electronic devices, the charging power of the electronic device should not exceed the power rating of the port. If the charging power of the electronic device exceeds the charging power rating of the port, do not charge it directly using this port.
- Use a certified USB-C cable. (1.8 M or less) If you do not do so, the screen may not be displayed or a connection error may occur.
- USB-C ports do not support DPM (Sleep mode).
- Video daisy chain can be configured through HDMI OUT, and the input resolution can be supported up to 3840 x 2160 @ 60 Hz.

Touch screen

OS	Windows 10 / Windows 8 / Windows 7 / Android / Linux / macOS (Linux / macOS are supported with the 1 Point touch function.)	50 Points
	Chrome OS	16 Points
	Spacing between touches: at least 25 mm	

Speaker

* Applicable only to speaker-supporting models.

Audio	RMS audio output	18 W + 2 x 18 W (± 10 %)
	Input Sensitivity	0.5 Vrms
	Speaker impedance	Speaker : 6 Ω Woofer : 4 Ω

Specifications by Model

105TR5WP-B 105TR5WP-I		
Power	Power Voltage	100-240 V~ 50/60 Hz 6 A
Dimensions (Width x Height x Depth) / Weight	2510.7 mm x 1129.9 mm x 91.7 mm / 84.6 kg	

Resolution

Note

- Vertical Frequency: The monitor screen functions by the screen image changing dozens of times every second like a fluorescent lamp.
  The vertical frequency or refresh rate is the number of image displays per second.
  The unit is Hz.
- Horizontal Frequency: The horizontal interval is the time taken to display one horizontal line. When one is divided by the horizontal interval, the number of horizontal lines displayed every second is the horizontal frequency. The unit is kHz.

HDMI / USB Type-C / DP Supported Mode

Resolution	Horizontal Frequency (kHz)	Vertical Frequency (Hz)	Note
640 x 480 @ 60 Hz	31.469	59.94	
640 x 480 @ 60 Hz 4:3	31.5	60	
720 x 480 @ 60 Hz 4:3	31.5	60	
720 x 480 @ 60 Hz	31.5	60	
800 x 600 @ 56 Hz	35.156	56.25	
800 x 600 @ 60 Hz	37.879	60.32	
848 x 480 @ 60 Hz	31	60	
1024 x 768 @ 60 Hz	48.363	60	
1280 x 720 @ 60 Hz	45	60	
1280 x 768 @ 60 Hz (RB)	47.396	59.99	
1280 x 768 @ 60 Hz	47.776	59.87	
1280 x 800 @ 60 Hz	49.702	59.81	
1280 x 960 @ 60 Hz	60	60	
1280 x 1024 @ 60 Hz	63.981	60.02	
1360 x 768 @ 60 Hz	47.712	60.02	
1366 x 768 @ 60 Hz	47.712	59.79	(For HDMI 2,3,4 / USB Type-C only)

Resolution

Resolution	Horizontal Frequency (kHz)	Vertical Frequency (Hz)	Note
1400 x 1050 @ 60 Hz (RB)	64.744	59.948	
1400 x 1050 @ 60 Hz	65.317	59.978	
1600 x 900 @ 60 Hz	60	60	
1600 x 1200 @ 60 Hz	75	60	
1680 x 1050 @ 60 Hz (RB)	64.674	59.883	
1680 x 1050 @ 60 Hz	65.29	59.95	
1920 x 1080 @ 23 Hz	26.973	23.98	
1920 x 1080 @ 24 Hz	27	24	
1920 x 1080 @ 25 Hz	28.125	25	
1920 x 1080 @ 30 Hz	33.75	30	
1920 x 1080 @ 60 Hz	67.5	60	
1080i @ 60 Hz	33.75	60	(For HDMI / DP only)
1080i @ 50 Hz	28.125	50	(For HDMI / DP only)
3840 x 2160 @ 60 Hz	135	59.94	
3840 x 2160 @ 50 Hz	112.5	50	
3840 x 2160 @ 30 Hz	67.5	29.97	
3840 x 2160 @ 25 Hz	56.25	25	
3840 x 2160 @ 24 Hz	54	23.98	
3840 x 2160 @ 23 Hz	53.946	23.976	
3440 x 1440 @ 60 Hz	89.48	59.94	
3440 x 1440 @ 50 Hz	74.14	49.96	
3440 x 1440 @ 30 Hz	43.96	29.95	
5120 x 2160 @ 30 Hz	66	30	(For HDMI 1 / DP only)
5120 x 2160 @ 50 Hz	112.5	50	(For HDMI 1 / DP only)
5120 x 2160 @ 60 Hz	135	60	(For HDMI 1 / DP only)

Wireless module Specifications

Wireless module (SI07E) Specifications	
Wireless LAN (IEEE 802.11a/b/g/n/ac/ax)	
Frequency range (MHz)	**Output power (Max.) (dBm)**
2412 to 2472	19.94
5180 to 5320	21.36
5500 to 5700	19.93
5745 to 5825	13.93
5955 to 6415	15.00
Bluetooth	
Frequency range (MHz)	**Output power (Max.) (dBm)**
2402 to 2480	7.95

- As band channels can vary per country, the user cannot change or adjust the operating frequency. This product is configured for the regional frequency table.
- For consideration of the user, this device should be installed and operated with a minimum distance of 20 cm between the device and the body.

(Only Nigeria)

Connection and use of this communication equipment is permitted by the Nigerian Communications Commission.

Licence

Supported licenses may differ by model. Visit www.lg.com for more information on licenses.

HDMI™
HIGH-DEFINITION MULTIMEDIA INTERFACE

The terms HDMI, HDMI High-Definition Multimedia Interface, HDMI trade dress and the HDMI Logos are trademarks or registered trademarks of HDMI Licensing Administrator, Inc.

CRESTRON
CONNECTED

This product qualifies for ENERGY STAR®.
Changing the factory default configuration and settings or enabling certain optional features and functionalities may increase energy consumption beyond the limits required for ENERGY STAR® certification.
Refer to ENERGYSTAR.gov for more information on the ENERGY STAR® program.

The model and serial number of the product are located on the back and on one side of the product. Record them below in case you ever need service.

MODEL

SERIAL NO.

Temporary noise is normal when powering ON or OFF this device.