OWNER'S MANUAL

LG Digital Signage

(MONITOR SIGNAGE)

Please read the user manual before using this product to ensure safe and convenient use.

55EF5K

55EF5K-L

55EF5K-P

MFL71934805
(2502-REV01)

www.lg.com

Copyright © 2022 LG Electronics Inc. All Rights Reserved.

ENGLISH

TABLE OF CONTENTS

SAFETY PRECAUTIONS 3

- Precautions for the AC Adapter and Power 4
- Precautions for Moving the Product.....6
- Precautions for Installing the Product 7
- Precautions for Cleaning the Product.....9
- Precautions for Using the Product.....10
- Precautions for Using the Remote control.....12
- Precautions for Experiencing Image Retention 13
- Product Disposal.....13

ASSEMBLY AND PREPARATION..... 14

- Storage Method For Panel Protection 15
- Safety and Precaution Guide for Installation.....17
- Installing on a Wall.....19
- Connecting the LC (Luminance Compensation) Cable.....20
- External equipment Setup.....21
- How to Set the Screen Protection Mode.....21
- Tiling Displays 22

REMOTE CONTROL 24

MAKING CONNECTIONS..... 26

- Connecting to a PC.....26
- External Device Connection.....26
- Using the Input List 27

TROUBLESHOOTING..... 28

PRODUCT SPECIFICATIONS..... 31

LICENSES..... 35

TO SEE THE WEB MANUALS (SOFTWARE USER GUIDE / INSTALLATION MANUAL) 36

WARNING - This equipment is compliant with Class A of CISPR 32. In a residential environment this equipment may cause radio interference.

SAFETY PRECAUTIONS

The safety precautions are intended to prevent unexpected danger or harm by helping the user to use the product safely and for its intended purpose.

WARNING

If you ignore the warning message, you may be seriously injured or there is a possibility of accident or death.

CAUTION

If you ignore the caution message, you may be slightly injured or the product may be damaged.

WARNING

- Indoor Use Only.

Precautions for the AC Adapter and Power

WARNING

- Use only the power cord or AC adapter provided or approved by LG Electronics, Inc. If you use another power cord, make sure that it is certified by the national standards. If the power cable is faulty in any way, please contact the manufacturer or the nearest authorized service center for a replacement.
- Operate the display only from a power source (i.e. voltage) indicated in the product specification.
  - Otherwise the product can be damaged, fire can occur or you may be electrocuted. If you are not sure what type of power supply you have, consult a certified installation company.
- Make sure the power cord connect to a properly grounded outlet.
  - If you do not you may be electrocuted or injured or the product can be damaged.
- Insert the power plug or AC adapter firmly so it cannot come loose.
  - Poor connection may cause a fire or electric shock.
- In the presence of thunder and lightning, never touch the power cord and signal cable because it can be very dangerous.
  - It can cause electric shock.
- Be careful not to step or place heavy objects (electronic appliances, clothing, etc.) on the power cord or AC adapter. Additionally, do not bend or pull out the power cord or AC adapter with excessive force.
  - Damaged power cords may cause a fire or electric shock.
- Do not connect power cord or AC adapter damaged with sharp objects to power outlet.
  - You may be electrocuted.
- Do not insert a conductor (like a metal chopstick) into one end of the power cord while the other end is connected to the input terminal on the wall. Additionally, do not touch the power cord right after it is unplugged.
  - You may be electrocuted.
- Do not use with a multi-outlet connected by many electrical product and heating devices. Use an exclusive multi-outlet with a grounding terminal.
  - A fire can break out due to overheating.

- If water or any foreign substance goes inside the product, disconnect the power cord immediately and contact the service center.
  - Otherwise, this may cause a fire or electric shock due to damage to the product.
- Keep the power cord or AC adapter away from any heating devices.
  - The cord coating may melt and cause fire or electric shock.
- Never disassemble, repair or modify the power cord or AC adapter.
  - This may cause a fire or electric shock.
- The main cutoff device is the power cord. Please make sure the product is installed near the wall outlet and that it is easily accessible.
- As long as this unit is connected to the AC wall outlet, it is not disconnected from the AC power source even if the unit is turned off.
- Power consumption will be '0' only when the power plug is unplugged.
- Use the appliance coupler as the disconnect device.

⚠ CAUTION

- If the outlet pins of the power plug or AC adapter is covered with dust, be sure to wipe them and keep them clean.
  - Overheating due to layers of dust may cause a fire or electric shock.
- If the outlet pins of the power plug or AC adapter is covered with water be sure to wipe them and keep them clean. Additionally, Do not touch the power plug or AC adapter with wet hands.
  - This may cause an electric shock.
- Do not turn the product on or off by plugging in or unplugging the power plug from the power outlet. Do not use the power socket as a switch.
  - This may cause an electric shock or product malfunction.
- Do not unplug the power cord while the product is in use.
  - Electrical shock can damage the product.

Precautions for Moving the Product

WARNING

- Contact the service center before moving the product.
  - It may cause electric shock and damage the product.
- Make sure the product is turned off, unplugged, and all cables have been removed before the product is moved.
  - You may be electrocuted or the product can be damaged.
- When moving the product, do not shock or cause an impact on the front panel.
  - You may be electrocuted or the product can be damaged.
- Use the correct number of people according to the weight of the product. (Under 25 Kg per person use lifting equipment when exceeding 100 Kg)
  - If use the damaged product again, contact the service center because it can cause electric shock or fire.
- Do not hold it upside down while holding only the stand. (It is for stand supported models only.)
  - This may cause stand warping, panel damage and other types of product damage.

CAUTION

- Do not dispose of the product-packing box. Use it when moving by putting the product in the box to carry it.

Precautions for Installing the Product

WARNING

- Contact the service center before installing the product.
  - It can cause electric shock and damage the product.
- Do not drop an object on or impact on the product. Keep out of reach of children and do not place toys or objects near the product to prevent throwing things on the product screen.
  - It can cause injury to human, problem to product and damage the display.
- Do not put heavy objects on, or hang from, the product.
  - If the product collapses or is dropped, you may be injured.
- Do not touch the surface of the product if it overheats.
  - It can cause injury to human.
- Install the product firmly fixed on a floor, wall, etc. to prepare against external impact such as wind and earthquake.
  - You must refer to the manual provided.
- Prevent Children from climbing or hanging on the product.
  - If the product collapses or is dropped, you may be injured.
- Do not install it where there are heating devices such as electrical heaters or lighting equipment.
  - Fire, electrical shock, malfunction may occur.
- Do not install this product by yourself as you may injure yourself or cause damage to the product. Please contact service engineer authorized by service center.
- Do not install this product on a wall if it could be exposed to oil or oil mist.
  - This may damage the product and cause it to fall.
- Do not leave the power or signal cable, etc. on the pathway.
  - This could cause a trip or fall, which could cause an electrical shock, fire, product breakdown, or injury.
- Do not let the product drop when connecting it to an external device connected with a short cable.
  - This may cause injury and damage to the product.
- If you drop the product or the case is broken, turn off the product and unplug the power cord and contact the service center.
  - If you continue to use without taking proper measures, electrical shock or fire can occur.
- Install the product in a dry place where it is not near dust and water. Avoid high temperatures and humidity.
  - This may cause electrical shock, fire or product damage.
- Safely install the product in a place that can hold the weight of the product.
  - A lack of strength may cause the product to fall.
- Take a comfortable and natural position to relax the muscles when working with a product.

⚠ CAUTION

- Install the product where no Electromagnetic Interference occurs.
- If you install the product in a place that does not meet the recommended conditions, this may cause serious damage to the product's picture quality, life cycle, and appearance. Please check with service engineer before installing. Please do not install the product in places such as where there is an abundance of fine dust or oil mist, chemical substances are used, exposed to direct sunlight, the temperature is very high or low, the humidity is very high.
- Make sure the product is well ventilated by Installing at a distance (100 mm or more) from the wall.
  - If you install the product too close to the wall, it may be deformed or fire can break out due to internal heat buildup.
- Do not cover the product with a tablecloth or a curtain or other materials (e.g. plastic) while plugged in. Do not block the ventilation hole of the product.
  - The product can be deformed or fire can break out due to overheating inside the product.
- Do not install the product in an area with poor ventilation (e.g. on a bookshelf, in a closet) or outside and avoid placing on cushions or carpets.
  - The product could catch fire due to overheating inside the product.
- Install the product on a flat and stable place that is large enough to support the product.
  - If the product is dropped, you may be injured or the product may be broken.
- When installing the product on a shelf or cabinet, make sure that the bottom end of the product is not protruding forward.
  - The product may fall due to unbalanced center of gravity, which may cause personal injury or damage to the product. Be sure to use cabinets or shelves that fit your product.

Precautions for Cleaning the Product

WARNING

- Keep the product clean at all times.
  - If you don't clean the unit for a long time and it becomes covered in dust, it can cause fire or product damage.
- When you need to clean the inside of the product, you must contact the service center.
  - Otherwise, cleaning without support may cause a fire, electric shock, or damage to the product.
- When cleaning the product, unplug the power cord and wipe gently with a soft cloth to prevent scratching.
  - An electric shock may occur or damage to the screen if its scratched.
- When you want to clean the front frame, spray water onto a soft cloth 2 to 4 times and wipe in one direction only.
  - Too much moisture may cause staining.

CAUTION

- When cleaning the product or the screen, unplug the power cord and wipe it gently with a soft cloth. Do not spray water or other liquids directly on the product. Especially, do not clean your product with chemicals including glass cleaner, any type of air freshener, insecticide, lubricants, wax (car, industrial), abrasive, thinner, benzene, alcohol, etc., which can damage the product or its panel.
  - This may result in fire, electric shock or product damage (deformation, corrosion or breakage).

Precautions for Using the Product

WARNING

- Do not use the product in any environment with excessively high temperatures or humidity.
  - It may cause electrical shock or damage the product.
- If you use the product for a long period of time, take a rest from time to time to protect your vision.
  - Extended viewing could result in impaired vision.
- Listening at high volume or using for a long time can cause damage to your hearing.
- In the event that liquid or a foreign object falls into the product, please switch it off and unplug it from the wall outlet and contact the service center.
  - Otherwise, the product may cause fire or electric shock.
- In the event that no image appears on the screen or no sound is heard, stop using the product. Switch it off immediately, unplug it from the power outlet and contact the service center.
  - Otherwise, the product may cause fire or electric shock.
- Do not drop an object or impact on the product or screen.
  - It can cause injury to human, problem to product and damage the screen.
- If you can smell smoke or other odors or hear a strange sound, unplug the power cord and contact the service center.
  - If you continue to use the product without taking proper measures, it may cause electrical shock or fire.
- Do not attempt to disassemble, repair or modify the product yourself. Please contact service center if you need to repair it.
  - Fire or electric shock can occur.
- Do not place objects filled with liquids such as vases, cups etc. on or over the product to prevent liquid from entering the product.
  - Failure to do so may result in fire, electric shock, malfunction or deformation.
- Do not push hard on or scratch the product's surface with your hands or sharp objects, such as nails, pencils or pens. Do not shock or scratch the front and sides of the screen with metallic objects.
  - This may damage the products and cause it to malfunction.
- Do not touch the product if it has been exposed to sunlight or an intense light because it could be hot.

- Do not use high voltage electrical goods near the product (e.g., a bug zapper).
  - This may result in product malfunction if it receives an electrical shock.
- If there is a gas leak, do not touch the outlet, and open the windows for ventilation.
  - Otherwise, the product may cause fire or electric shock.
- If you drop the product or the case is broken, turn off the product and unplug the power cord.
  - If you continue to use without taking proper measures, electrical shock or fire can occur. Contact the service center.
- Keep small accessories out of the reach of children.
  - If a child swallows it, consult a doctor immediately.
- Keep out of reach of children from the product. Also, do not throw toys or objects at the product or screen.
  - It can cause injury to human, problem to product and damage the screen.
- All the power sources must be disconnected by removing the power cables to remove all power from the unit.

⚠ CAUTION

- This panel is an advanced product that contains millions of pixels. You may occasionally see pixel spots when viewing the screen. Since these deactivated pixels are not a defect, the performance and reliability of the product is not affected.
- Do not put or store inflammable substances near the product.
  - There is a danger of explosion or fire.
- Keep the proper distance from the product.
  - It can cause damage to your vision if you look at the product too closely.
- Set the appropriate resolution and frequency by products.
  - It can cause damage to your vision.
- Take a regular break when working with the product for a long time.

Precautions for Using the Remote control

WARNING

- Avoid places with high humidity.
  - It may cause electrical shock or damage the product.
- Do not expose batteries to excessive heat, such as direct sunlight, open fireplace, and electric heaters.
  - It may cause fire and you may be injured.
- Make sure that children do not swallow the remote control batteries when you replace them. Keep batteries out of reach of children.
  - If a child swallows a battery, consult a doctor immediately.
- Do not dispose of batteries in a fire.
  - Please dispose batteries at a local recycling center or a retail store that handles batteries.
- Used batteries, which include rechargeable batteries, should be recycled separately from waste.
  - Please dispose used batteries and rechargeable batteries at a local recycling center or a retail store that handles batteries.

CAUTION

- Do not short circuit and disassemble of batteries.
  - It may cause electrical shock or fire.
- The remote control may not function properly in sunlight or under a strong lamp. Move the product if it is being used in these conditions.
- Check if there is any obstacle between the product and the remote control.
- Do not mix new batteries with old batteries.
  - Overheating or leaking batteries may cause fire or electric shock.
- Only use the specified type of battery. Do not insert batteries that are not rechargeable into the charger.
  - Overheating or leaking batteries may cause fire or electric shock.

Precautions for Experiencing Image Retention

- Displaying a still image for a prolonged period of time may cause damage to the screen, resulting in image retention. Most third-party products have the same issue. The resulting damage is not covered by the product warranty.
  - Use a screen saver when using the monitor for a prolonged period of time.

Product Disposal

- Do not dispose of this product with general household waste.
- Disposal of this product must be carried out in accordance to the regulations of your local authority.

ASSEMBLY AND PREPARATION

CAUTION

- Always use genuine components to ensure safety and product performance.
- The product warranty will not cover damage or injury caused by the use of counterfeit components.
- Connect the power cord to the product before you plug it into a wall outlet. Plugging the power cord into a wall outlet first may cause an electric shock, which can also damage the product.
- The warranty will not cover any damage caused by using the product in an excessively dusty environment.
- When tightening and removing screws, do not apply force directly or impact the panel.
  - This may cause damage to the product.

NOTE

- The accessories provided with your product may vary depending on the model or region.
- Product specifications or contents in this manual may be changed without prior notice due to upgrade of product functions.
- SuperSign Software & Manual
  - Downloading from the LG Electronics website.
  - Visit the LG Electronics website (*http://partner.lge.com*) and download the latest software for your model.

Storage Method For Panel Protection

Correct Method

1 If the product needs to be set upright, hold both sides of the product and make sure that the panel does not touch the floor.

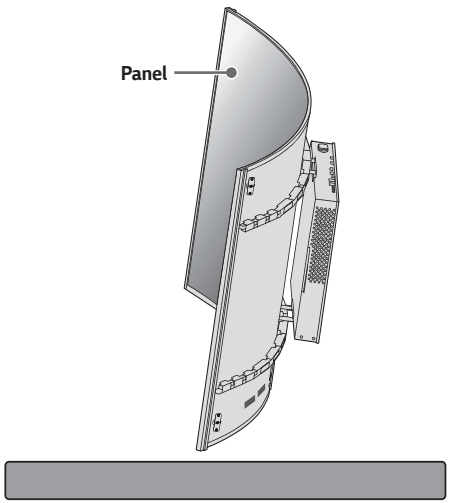

2 When laying down the product, lay a cushion on a flat floor. Put the product on it with the panel of the product facing down.

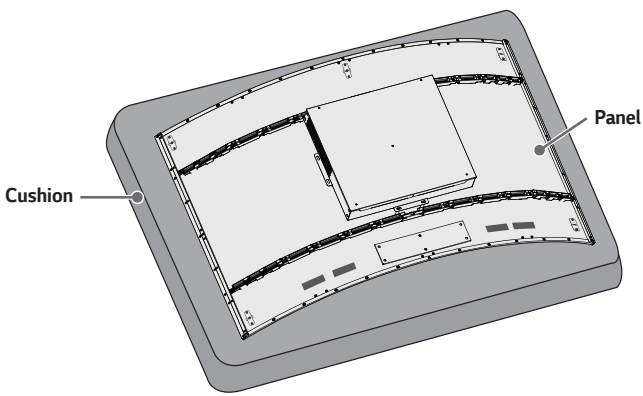

Incorrect Method

1 If the product is tilted onto the bezel, the bottom of the panel may be damaged.

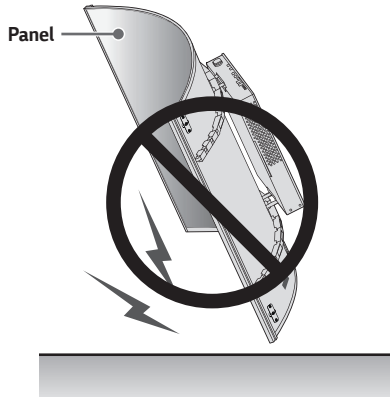

2 If the product is tilted onto the edge of the panel, the panel may be damaged.

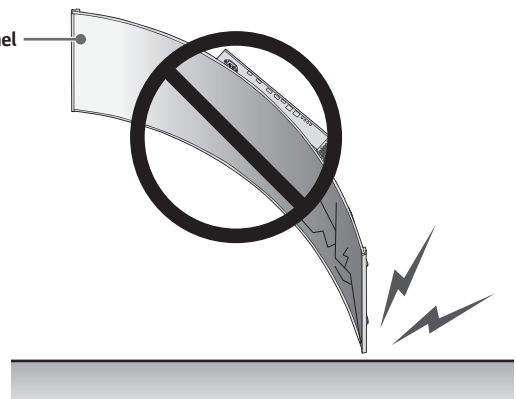

Safety and Precaution Guide for Installation

Please connect the power after all work is completed.

Connecting the Signage Box and Panel

- The warranty will not cover any component damage caused by electrostatic discharge at the time of installation. When installing this product, you must wear anti-electrostatic discharge (ESD) gear.
- The serial number on the panel and that on the signage box must match. Non-matching serial numbers may result in a blurry screen or product malfunction.

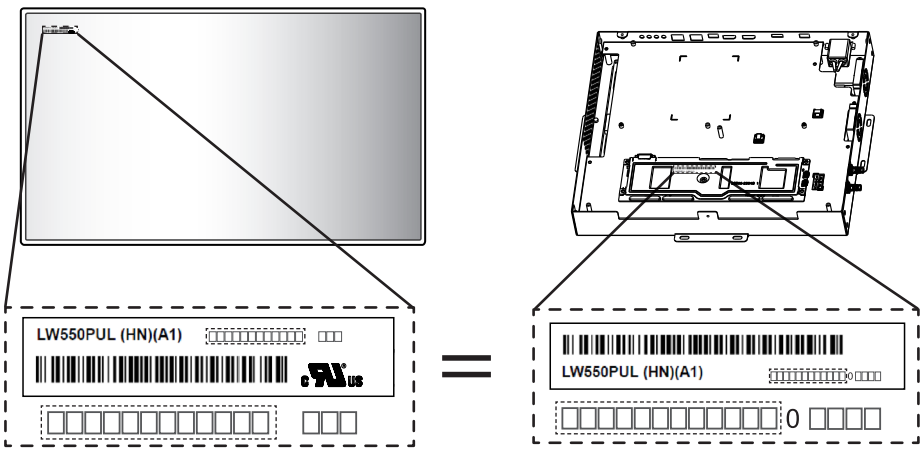

Connecting Cables

- A Insert the cable correctly into the connector, according to the guidelines indicated on the cable, and B close the connector locking bar.
- To prevent product malfunction or failure, do not shake or pull the installed cable, and replace any damaged cables with new ones.

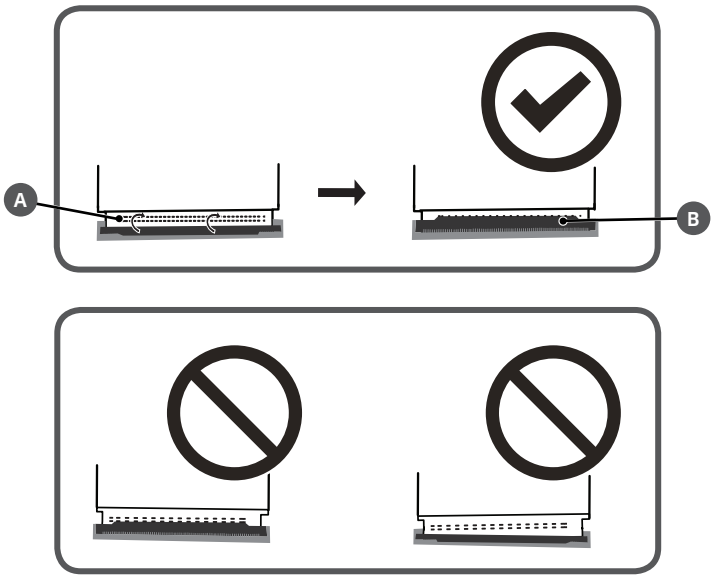

Direct Sunlight

- Install in a location that is not exposed to direct sunlight.

Installing on a Wall

Install the monitor at least 100 mm away from the wall and leave about 100 mm of space at each side of the monitor to ensure sufficient ventilation.

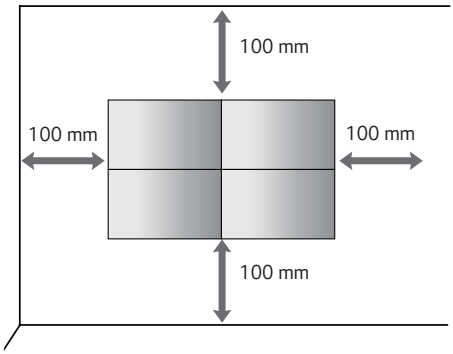

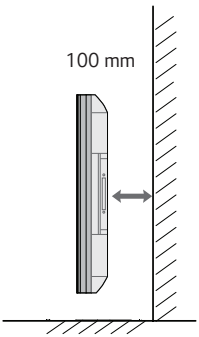

CAUTION

- Disconnect the power cord before moving or installing the monitor to avoid risk of electric shock.
- If you install the monitor on a ceiling or slanted wall, it may fall and result in injury.
- Do not over tighten the screws as this may damage the monitor and void your warranty.
- To prevent injury, this apparatus must be securely attached to the wall in accordance with the installation instructions. (This pertains only to Australia and New Zealand.)

(Australia only)

- This product must be installed by a professional installer.
- After the installation of the product in the customer premises, fully remove all product packaging (including any expanded or moulded plastic packaging materials) and recycle or dispose of such packaging responsibly. Do not dispose any expanded plastic packaging in the household bin.

NOTE

- Do not install the product in a place with no ventilation (e.g., on a bookshelf or in a closet) or on a carpet or cushion. If there is no other option but to mount the product on the wall, make sure that sufficient ventilation is provided before installation.
  - Failure to do so may result in a fire due to the increase in the internal temperature.
- The illustration shows a general example of installation and may look different from the actual product.

Connecting the LC (Luminance Compensation) Cable

Basic Connection Diagram of the LC (Luminance Compensation) Cable

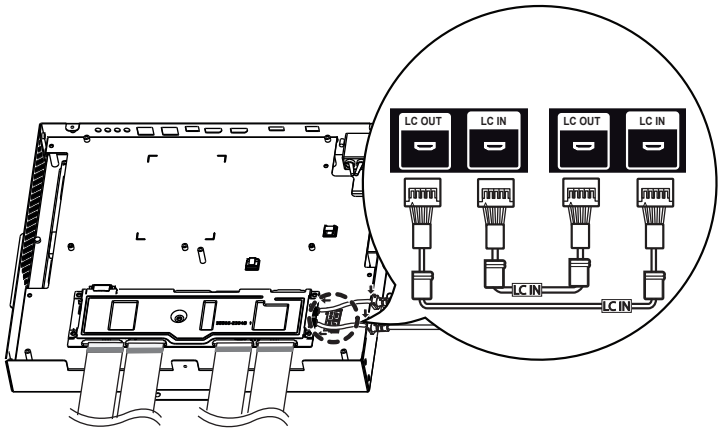

NOTE

- Connect the port with an attached label to LC IN.
- If not properly connected, the LC (Luminance Compensation) function does not operate as intended.
- The LC function will not operate normally if you use a cable other than the one provided.
  - Make sure that you use the cable provided exclusively for LC.
  - The length of the supplied LC dedicated cable is 3.0 m.
- Refer to Installation Guide for a detailed LC (Luminance Compensation) connection diagram.

Setting

- A unique Set ID should be designated to each set without being duplicated.
- The LC cable should be connected in the closed loop. Please refer to the Installation Guide for the connection method.

External equipment Setup

IR Receiver

This allows a remote control sensor to be placed in a custom location. Then that display can control other displays via an RS-232C cable.

How to Set the Screen Protection Mode

- [Screen Protection Mode Setting]: Prevents after-images on the screen by analysing the characteristics of the external input images.
- The settings differ, depending on the use of a single monitor/Video Wall Mode. For details about the settings, refer to the User Guide.
- [Screen Protection Mode] may not work properly in some video formats.
- To learn more about settings, specifications for playing, and restrictions, refer to “How to Set the Screen Protection Mode” in the user guide.

Tiling Displays

How to Mount the Set

Example of 2 x 2 Tiling

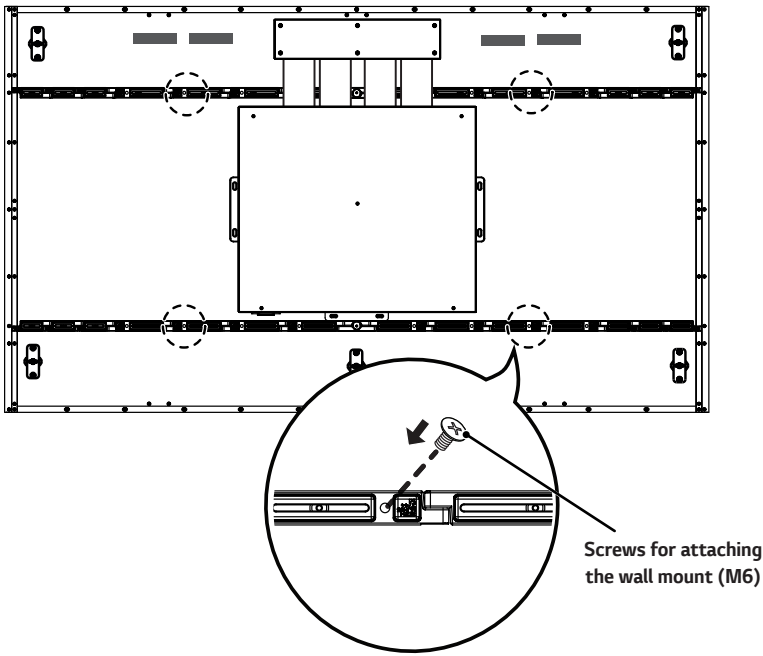

How to Join Sets

1 After joining the sets, use the tiling guide to adjust the gap between the sets.

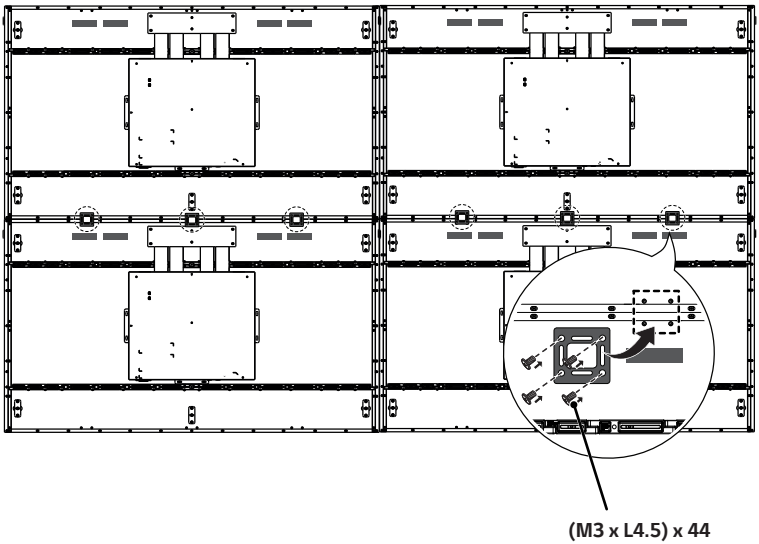

2 Now the 2 x 2 tiling is complete. You can tile in various combinations, such as 3 x 3.

NOTE

- You may mount the set without using the tiling guide; this does not affect the performance of the device.
- The screws are enclosed with the other components in the box, including the tiling guides.
- Refer to Easy Setup Guide for a detailed connection diagram.

REMOTE CONTROL

The descriptions in this manual are based on the buttons on the remote control. Please read this manual carefully to use the monitor correctly.

To install batteries, open the battery cover, place batteries (1.5 V AAA) matching ⊕ and ⊖ terminals to the labels inside the compartment, and close the battery cover.

To remove the batteries, perform the installation actions in reverse. The illustrations may differ from the actual accessories.

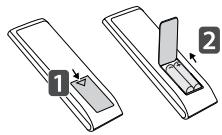

⚠ CAUTION

- Do not mix old and new batteries, as this may damage the remote control.
- Ensure the remote control is always pointed toward the monitor's IR receiver.
- Some features of the remote control may not be supported in certain models.
- The product's internal and external batteries should not be exposed to excessive heat such as direct sunlight, fire, or the like.

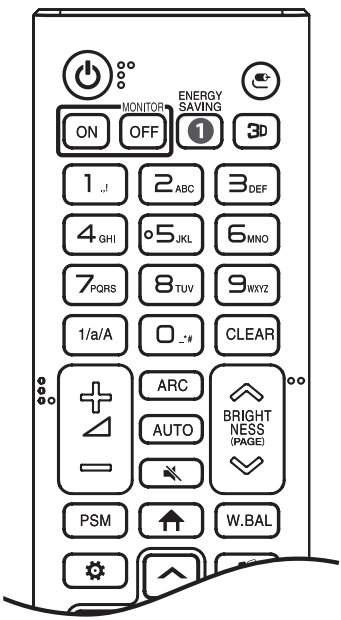

(POWER) Turns the monitor on or off.

MONITOR ON Turns the monitor on.

MONITOR OFF Turns the monitor off.

1 ENERGY SAVING Adjusts the brightness of the picture to reduce energy consumption.

(INPUT) Selects the input mode.

3D Used for viewing 3D video. (This function is not supported.)

Number and Alphabet buttons Enters numerical or alphabetical characters depending upon the setting.

1/a/A Toggles between numerical and alphabetical. (This function is not supported.)

CLEAR Deletes the entered numerical or alphabetical character.

(Volume Up/Down Button) Adjusts the volume level.

ARC Selects the screen size.

AUTO Automatically adjusts picture position and minimizes image instability. (This is supported only for the RGB input.)

(MUTE) Mutes all sounds.

BRIGHTNESS Adjusts the brightness of the display.

(PAGE) Moves to the previous or next screen. (This function is not supported.)

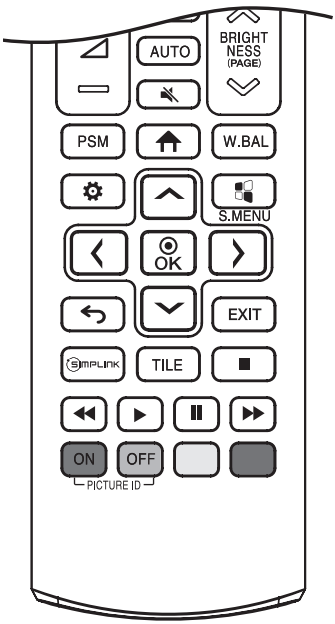

PSM Selects the Picture Mode.

(HOME) Activates the Launcher.

W.BAL Enters the White Balance menu.

(SETTING) Accesses the main menus or saves your input and exit menus.

S.MENU SuperSign menu key. (This function is not supported.)

, OK After selecting the menu, select and adjust functions.

(BACK) Returns to the previous level.

EXIT Closes the menu.

SIMPLINK Allows you to control various multimedia devices to enjoy multimedia simply by using the remote control through the SimpLink menu.

TILE You can choose to turn TILE Mode on/off.

(Control Buttons) Controls media playback. (This function is not supported.)

PICTURE ID ON/OFF When the Picture ID number matches the Set ID number, you can control whichever monitor you want in multi-display format.

- **ON** : Individually control the monitors with an image ID assigned to each of them.
- **OFF** : Control the monitors at once.

MAKING CONNECTIONS

You can connect various external devices to your monitor. Change the input mode and select the external device you want to connect. For more information about external device connections, see the user manual provided with each device.

Connecting to a PC

Some of the cables are not provided. This monitor supports the Plug and Play* feature.

* Plug and Play: a feature that enables a PC to recognize devices attached by the user without device configuration or user intervention when powering up.

External Device Connection

Some of the cables are not provided. Connect a HD receiver, DVD, or VCR player to the monitor and select an appropriate input mode.

For the best picture and sound quality, connecting external devices to your monitor using HDMI cables is recommended.

NOTE

- For the best image quality, using the monitor with HDMI connection is recommended.
- To comply with the specifications of the product, use a shielded interface cable with ferrite core, such as a HDMI cable.
- If you turn the monitor on when the set is cold, the screen may flicker. This is normal.
- Sometimes red, green, or blue spots may appear on the screen. This is normal.
- Use a High Speed HDMI®/™ cable (shorter than 3 meters).
- Use a certified cable with the HDMI logo attached. If you do not use a certified HDMI cable, the screen may not display or a connection error may occur.
- Recommended HDMI Cable Types
  - High Speed HDMI®/™ Cable
  - High Speed HDMI®/™ Cable with Ethernet
- If you cannot hear any sound in HDMI mode please check your PC settings. Some PCs require you to manually change the default audio output to HDMI.
- If you want to use HDMI-PC mode, you must set your PC/DTV to PC mode.
- You may experience compatibility issues if you use HDMI-PC mode.
- Make sure the power cable is disconnected.
- If you connect a gaming device to the monitor, use the cable provided with the gaming device.

CAUTION

- Do not press the screen with your finger for a prolonged period as this may result in temporary distortion on the screen.
- Avoid displaying static images on the screen for a long period of time to prevent image retention. Use a screensaver if possible.
- A wireless communication device near your monitor can affect the image.

Using the Input List

(HOME) →

- HDMI → DISPLAYPORT

TROUBLESHOOTING

» Each model may have different points to check.

» For information on your PC settings, refer to the Windows Help.

Issues Related to Use

- The power won't turn on.
  - Check if the power cord is correctly plugged into the power outlet.
  - Try turning the power on after disconnecting the AC adapter and cleaning the contacting port.
- The 'Unknown Product' message appears when the product is connected.
  - Check if the driver of PC (graphics card) has been installed.
  - Check if the plug and play function is supported by the PC(graphics card) user manual.

Issues Related to Screen (Video)

- A message saying 'No signal' or 'Invalid Format' appears.
  - The signal cable is not connected between the PC and the product, or the cable connection status is unstable. Check the signal cable.
  - Access the input menu to check the input signal.
  - The signal from the PC (Graphics card) is out of the vertical or horizontal frequency range of the product. Adjust the frequency range by referring to the specifications in this manual.
- The position of the screen is incorrect.
  - Check if the graphics card resolution and frequency are supported by the product. If the frequency exceeds the supported range, use PC settings to set the resolution to the recommended value.
  - D-Sub analog signal - Press the **AUTO** button in the remote control to automatically select the optimal screen status that fits into the current mode. If the adjustment is not satisfactory, adjust the display settings manually in the OSD menu.

- The screen is displayed abnormally.
  - Connect the signal cable that matches with the source input signal.
  - When connecting the panel and the Signage box, check their serial numbers and make sure they match. If the serial numbers match, unplug the power cord and plug it in again to run the Clear Panel Noise feature. (The system will reboot automatically after running the feature.)
    You can also run the feature in ⚙ (Settings) → [Display] → [Advanced Settings] → [OLED Panel Settings] → [Clear Panel Noise] menu.
- Images are flickering or fluttering on the screen.
  - If you turn the monitor on when it is cold, the screen may flicker. This is normal.
  - Make sure that the current resolution and frequency settings of the graphics card are supported by the monitor.
- Stripes appear in the background.
  - D-Sub analog signal - Press the **AUTO** button in the remote control to automatically select the optimal screen status that fits into the current mode. If the adjustment is not satisfactory, adjust the display settings manually in the OSD menu.
- Horizontal noise appears or the characters look blurred.
  - D-Sub analog signal - Press the **AUTO** button in the remote control to automatically select the optimal screen status that fits into the current mode. If the adjustment is not satisfactory, adjust the display settings manually in the OSD menu.
- The image is not displayed.
  - Check that the cable is properly connected between the panel and the Signage box.

Issues Related to Screen (Color)

- Screen has poor color resolution (16 colors).
  - Use PC settings to set the color to 24 bits (True Color) or above.
- Screen color is unstable or mono-colored.
  - Check the connection status of the signal cable. Or, re-insert the PC graphics card.
- Black spots or bright spots appear on the screen.
  - Some pixels (red, green, blue, black) are visible on the screen due to the unique characteristics of the display panel. This is not a malfunction of the product.
- The screen's brightness seems dark.
  - Adjust brightness and contrast again.

Issues Related to Sound

- There is no sound output.
  - See if the audio cable is connected properly.
  - Adjust the volume of the product or external device.
  - See if the sound is set properly.
- Sound is too dull.
  - Select the appropriate equalizer sound.
- Sound is too low.
  - Adjust the volume of the product or external device.
- For some models, you will need to purchase external speakers separately since they do not have speakers built-in.

Other Issues

- The power suddenly turned off.
  - Check if the auto-off function is activated on the settings related time.
  - Power source has not being supplied properly. See if the product power cord is connected properly.
  - Check the power control settings.
  - Check if the fan is working properly.
    View the fan status in ⚙ (Settings) → [General] → [System Information] → [Fan Status].

OLED Image sticking

- Since afterimage can occur when a specific fixed screen is used for a long time, To reduce after-images, it is recommended not to exceed the recommended daily operation time set for the screen size and to display the video content with a small number of fixed characters or logos.
  Recommended daily operation time (55 inches: 18 hours, 65 inches: 12 hours)
- A few horizontal lines may appear on the screens while running the [Clear Panel Noise] feature. This is normal, so there is no need for concern. If the power is turned on or a power failure occurs while the [Clear Panel Noise] feature is running, the feature may not work properly.
- Turn the power on five minutes after running the [Clear Panel Noise] feature.
- The external speakers connected to the product may make a sound while you are running the [Clear Panel Noise] feature.
- [Clear Panel Noise]: Correct issues that may arise on the screen when it is turned on for a long period of time.
- Use the [Screen Protection Mode Setting] feature in [OLED Panel Settings] to effectively prevent the formation of an afterimage.

PRODUCT SPECIFICATIONS

The product specifications below may be changed without prior notice due to upgrade of product functions.
" ~ " refers to alternating current (AC), and " ⎓ " refers to direct current (DC).

OLED screen	Screen type	Thin Film Transistor (TFT) OLED Screen	
Operating conditions	Daily usage	18 hours (video)	
Video signal	Maximum resolution	HDMI/DISPLAYPORT: 3840 x 2160 @ 30 Hz - This may not be supported on some OS or graphics card types.	
	Recommended resolution	HDMI/DISPLAYPORT: 1920 x 1080 @ 60 Hz - This may not be supported on some OS or graphics card types.	
	Horizontal frequency	HDMI/DISPLAYPORT: 30 kHz to 83 kHz	
	Vertical frequency	HDMI/DISPLAYPORT: 56 Hz to 60 Hz	
	Synchronization	Separate Sync, Digital	
Input/Output ports	HDMI IN, DP IN/OUT, USB2.0 IN, LAN IN/OUT, IR IN, RS-232C IN/OUT, AUDIO OUT, LC IN/OUT		
Embedded battery		Applied	
Environmental Conditions	Operating Temperature	0 °C to 40 °C	
	Operating Humidity	10 % to 80 %	
	Storage Temperature	-20 °C to 60 °C	
	Storage Humidity	5 % to 85 %	
OLED Panel	Pixel Pitch	0.630 mm (H) x 0.630 mm (V)	
Power	Rated Voltage	100-240 V~ 50/60 Hz 3.7 A	
Dimensions (Width x Depth x Height)	Display Module (Back metal plate assembled)	55EF5K-L	1224.9 x 38 x 696.2 (mm)
		55EF5K-P	701.4 x 38 x 1219.7 (mm)
	Signage Box	413 x 57.3 x 353 (mm)	
Weight	55EF5K-L	9.3 (kg)	
	55EF5K-P	10.5 (kg)	

(Unit: mm)

Signage Box

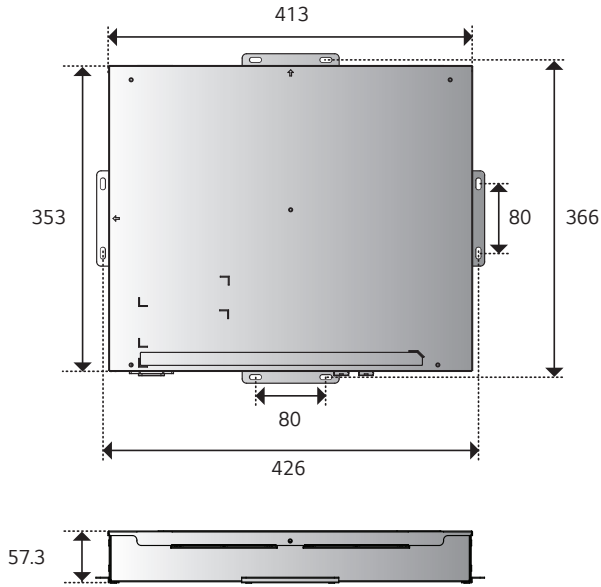

(Unit: mm)

55EF5K-L

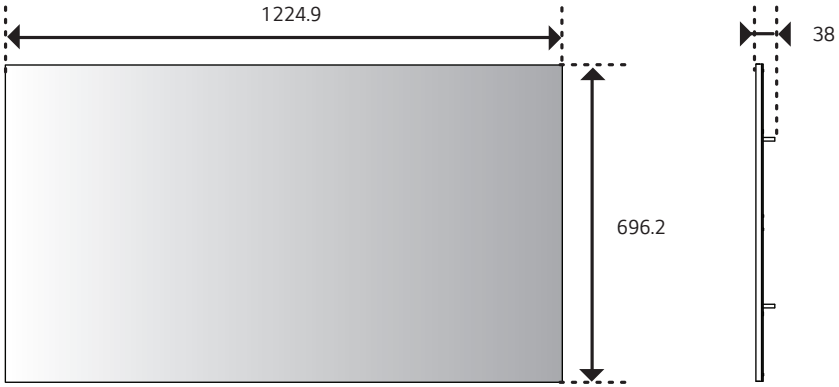

55EF5K-P

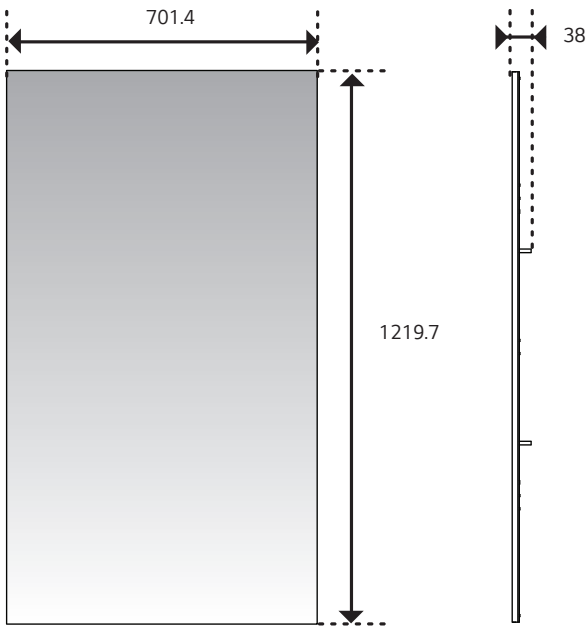

HDMI/DISPLAYPORT (PC) Support mode

Resolution	Horizontal frequency (kHz)	Vertical frequency (Hz)
800 x 600	37.879	60.317
1024 x 768	48.363	60
1280 x 720	44.772	59.855
1366 x 768	47.7	60
1280 x 1024	63.981	60.02
1680 x 1050	65.29	59.954
1920 x 1080	67.5	60
3840 x 2160	67.5	30

HDMI/DISPLAYPORT (DTV) Support mode

Resolution	Horizontal frequency (kHz)	Vertical frequency (Hz)
480/60p	31.5	60
576/50p	31.25	50
720/50p	37.5	50
720/60p	45	60
1080/50i	28.1	50
1080/60i	33.75	60
1080/50p	56.25	50
1080/60p	67.432	59.94
1080/60p	67.5	60
2160/30p	67.5	30

NOTE

- Vertical frequency: The product display functions by the screen image changing dozens of times every second like a fluorescent lamp. The vertical frequency or refresh rate is the number of image displays per second. The unit is Hz.
- Horizontal frequency: The horizontal interval is the time taken to display one horizontal line. When 1 is divided by the horizontal interval, the number of horizontal lines displayed every second can be tabulated as the horizontal frequency. The unit is kHz.

LICENSES

Supported licenses may differ by model. For more information of the licenses, visit *www.lg.com*.

HDMI™
HIGH-DEFINITION MULTIMEDIA INTERFACE

The terms HDMI, HDMI High-Definition Multimedia Interface, HDMI trade dress and the HDMI Logos are trademarks or registered trademarks of HDMI Licensing Administrator, Inc.

Manufactured under license from Dolby Laboratories. Dolby, Dolby Vision, Dolby Vision IQ, Dolby Audio, Dolby Atmos, and the double-D symbol are trademarks of Dolby Laboratories Licensing Corporation.

For DTS patents, see http://patents.dts.com. Manufactured under license from DTS Licensing Limited. DTS, the Symbol, & DTS and the Symbol together, DTS 2.0 Channel, DTS 2.0+Digital Out, DTS-HD, and DTS Virtual:X are registered trademarks or trademarks of DTS, Inc. in the United States and/or other countries. © DTS, Inc. All Rights Reserved.

HEVC Advance™
Covered by patents at patentlist.accessadvance.com

TO SEE THE WEB MANUALS (SOFTWARE USER GUIDE / INSTALLATION MANUAL)

You can find more information about the LG Digital Signage (Monitor Signage) in the web manuals (Software User Guide / Installation Manual).

For more information, visit the LG website at *http://partner.lge.com*.

The model and serial number of the product are located on the back and on one side of the product. Record them below in case you ever need service.

MODEL

SERIAL NO.

Temporary noise is normal when powering ON or OFF this device.