OWNER'S MANUAL

LG Digital Signage

(MONITOR SIGNAGE)

Please read the user manual before using this product to ensure safe and convenient use.

65US5P-E

www.lg.com

Copyright © 2024 LG Electronics Inc. All Rights Reserved.

TABLE OF CONTENTS

BASIC 3

- Checking the Accessories 3
- Learning the Buttons.....4

GETTING READY 5

- Connecting the IR Sensors 5
- Kensington Lock Device 6

CHECKING BEFORE INSTALLATION 7

- Installation Orientation 7
- Installation Location.....8
- Wall Mount Holder 9

PRECAUTIONS FOR USE..... 10

- Dust.....10
- Afterimage 10

PRODUCT SPECIFICATIONS..... 12

LICENCE..... 18

WARNING - This product is not intended for household use.

BASIC

NOTE

- The accessories provided with your product may vary depending on the model or region.
- Product specifications or contents in this manual may be changed without prior notice due to upgrade of product functions.
- SuperSign Software & Manual
  - Visit *https://partner.lge.com* to download the latest SuperSign software and manual.

Checking the Accessories

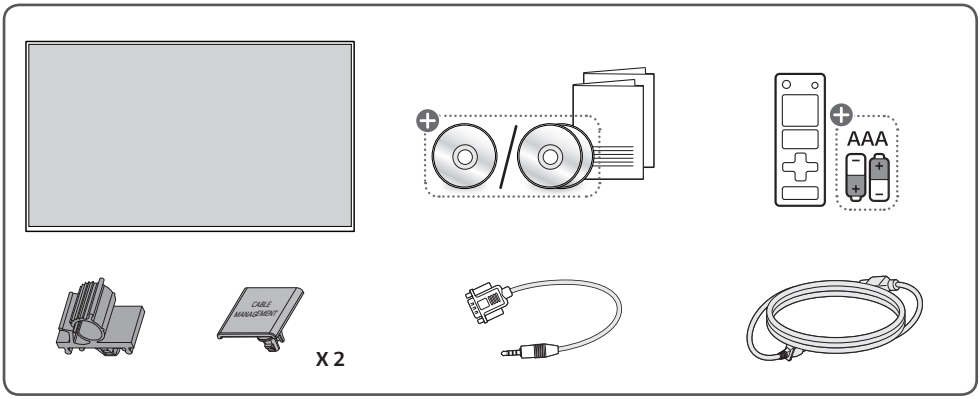

Depending on country

Learning the Buttons

The illustrations may differ depending on the model.

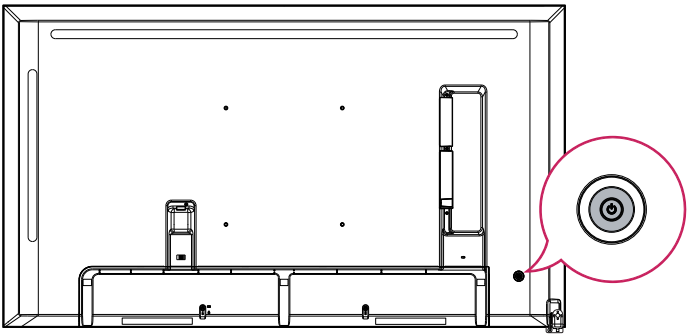

Power On (Press)
Quick Menu (Press [1])
Menu Selection (Press [2])
Power Off [3] (Press and Hold)

Volume Control
Menu Control [2]

Menu Control [2]

1 When the monitor is turned on, press the ⏻ button one time.
2 You can use the function when you control menu.
3 All running apps will close.

Quick Menu

⏻ Turns the power off.

Changes the input source.

Accesses the main menu.

✕ Close the quick menu.

GETTING READY

Connecting the IR Sensors

Connecting the cable to the product allows it to receive signals from the remote control.

Rotate the IR sensor according to horizontal or vertical use.

- The illustrations may differ depending on the model.
- Remove the protective cable film before use.

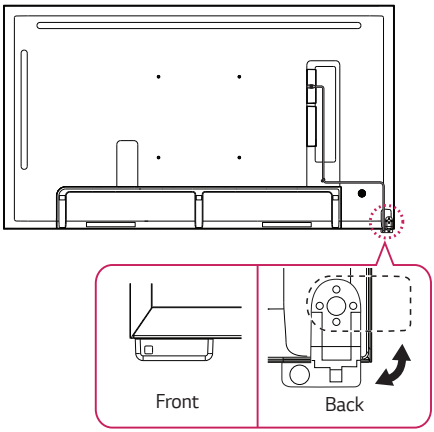

Horizontal Use (Default Mount)

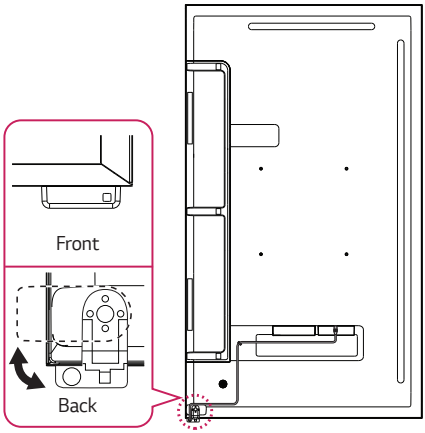

Vertical Use

You can hide the IR sensor.

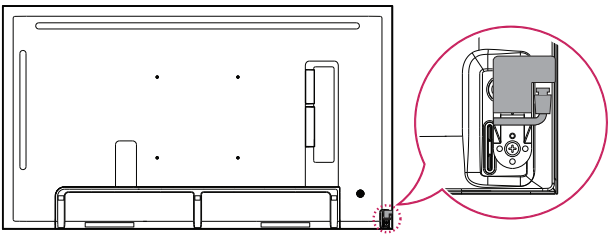

Kensington Lock Device

(This feature applies only to some models.)

The Kensington lock device connector is located on the back of the monitor. For more information on installation and use, refer to the user manual provided with the locking device.

Connect the Kensington security system cable between the monitor and a table.

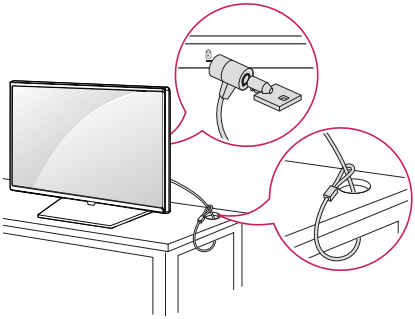

NOTE

- The Kensington lock device is an optional specification.
- This is a general illustration of installation and may look different from the product held by the customer.

CHECKING BEFORE INSTALLATION

We are not responsible for product damage caused by failure to follow the guide.

Installation Orientation

Using Vertically

When installing vertically, rotate the monitor 90 degrees anti-clockwise while facing the front of the screen.

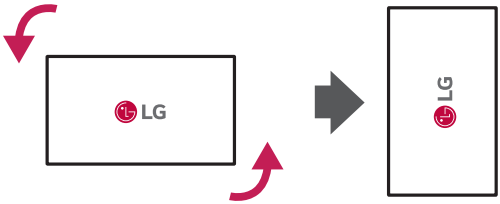

Tilt Angle

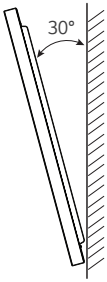

Ceiling, Floor Orientation

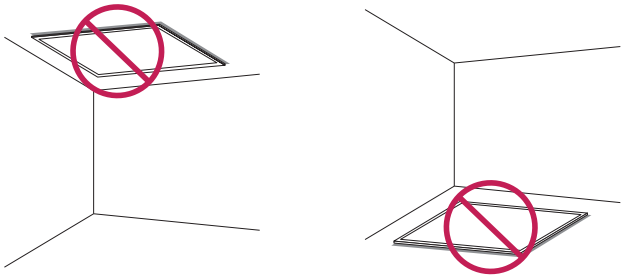

Installation Location

We are not responsible for product damage caused by failure to follow the guide.

Indoor

Installing on a Wall

13 mm (Slim Wall Mount, optional)
26 mm (Normal Wall Mount, optional)

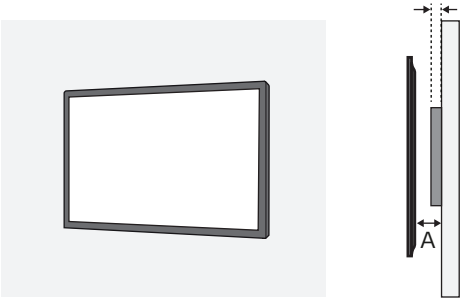

A : 13 mm or more

- The warranty will not cover any damage caused by using the product in direct sunlight on the front panel.
- Leave sufficient space around the product so that the ventilation vents of the product are not blocked.

Installing on a Recessed Wall

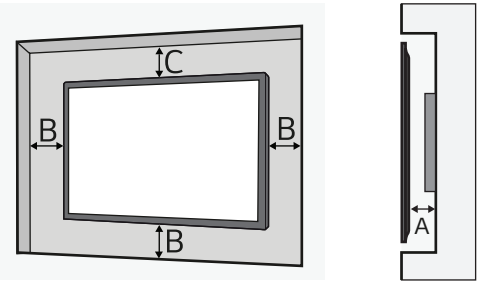

A : 13 mm or more
B : 50 mm or more
C : 70 mm or more

- The warranty will not cover any damage caused by using the product in direct sunlight on the front panel.

Outdoor

Outdoor Enclosed

Wall Mount Holder

To install the monitor on a wall, attach a wall mount holder (optional) to the back of the monitor.
Take caution, and ensure that the wall mount holder (optional) is securely fixed to the monitor and to the wall.
The VESA dimensions of the wall mount by model are as follows.

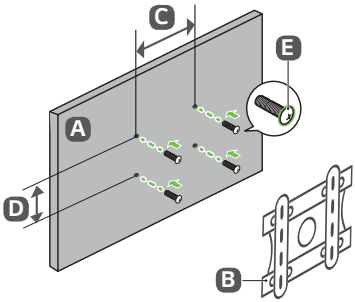

A	B	C x D (mm)	E	E Length (Maximum) (mm)
65US5P-E	OLW480*	300 x 300	M6	14

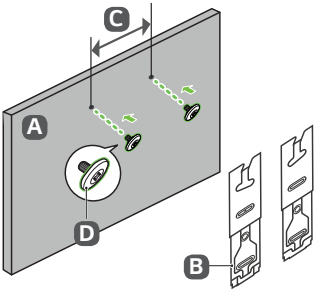

A	B	C (mm)	D	D Length (Maximum) (mm)
65US5P-E	WB21LM*	300	M6	14

CAUTION

- Disconnect the power cord first, and then move or install the monitor. Otherwise, it may result in electric shock.
- If the monitor is installed on a ceiling or inclined wall, it may fall and result in injury.
- Damage to the monitor by tightening the screws too tightly may void your warranty.
- Use screws and wall mount plates conforming to VESA standards. Breakage or personal injury due to use or misuse of inappropriate components is not covered by the warranty of this product.

NOTE

- Using screws longer than the indicated depth may damage the inside of the product. Be sure to use the proper length.
- For more information on installation, please refer to the user manual for the wall mount.

PRECAUTIONS FOR USE

Dust

The warranty will not cover any damage caused by using the product in an excessively dusty environment.

Afterimage

- After-image appears when the product is turned off.
  - Pixels may be damaged rapidly if a still image is displayed on the screen for a long period of time. Use the screen-saver function.
  - Switching from a screen with high differences in luminance (black and white or grey) to a darker screen may cause an afterimage. This is normal due to the display characteristics of this product.
- When the LCD screen is in a still pattern for extended periods of use, a slight voltage difference may occur between the electrodes that operate the liquid crystal (LC). The voltage difference between the electrodes increases over time and tends to keep the liquid crystal aligned in one direction. At this time, the previous image remains, which is called an afterimage.
- Afterimages do not occur when continuously changing images are used but take place when a certain screen is fixed for a long time. The following are operational recommendations for reducing the occurrence of afterimages when using a fixed screen. The maximum recommended time for switching the screen is 12 hours. Shorter cycles are better for preventing afterimages.

- Recommended Usage Condition

1 Change the background colour and text colour at equal intervals.

- Afterimages occur less when the colours to be changed are complementary to one another.

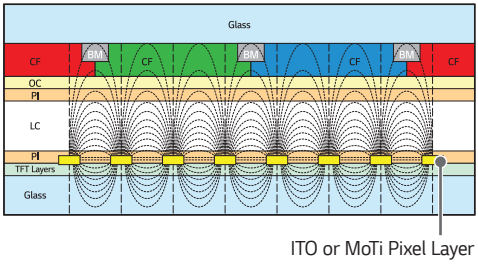

2 Switch the screen at equal time intervals.

- Take caution, and ensure that text or images from before the screen change are not left in the same location after the screen change.

PRODUCT SPECIFICATIONS

Without prior notice, all product information and specifications contained in this manual are subject to change to improve the performance of the product.

65US5P-E

Input/Output Ports	LAN IN, HDMI IN 1, HDMI IN 2, HDMI IN 3, DP IN, RS-232C IN, IR & LIGHT SENSOR, USB 2.0 IN, HDMI OUT, AUDIO OUT, RS-232C OUT	
Resolution	Recommended Resolution	3840 x 2160 @ 60 Hz (HDMI1,2,3 / DisplayPort) - This may not be supported on some OS or graphics card types.
	Max Resolution	
Embedded battery	Applied	
Environmental Conditions	Operating Temperature Operating Humidity	0 °C to 40 °C 10 % to 80 % (Condition for preventing condensation)
	Storage Temperature Storage Humidity	-20 °C to 60 °C 5 % to 85 % (Condition for preventing condensation) * Product box packaging storage conditions

NOTE

- Video Daisy Chain can be configured through HDMI OUT, and input resolution can support up to 3840 x 2160 at 30 Hz, and it cannot be above 30 Hz.

65US5P-E

Power Voltage	100-240 V~ 50/60 Hz 1.5 A
Size (Width x Height x Depth) / Weight	1450.3 mm x 830.3 mm x 29.7 mm / 24.2 kg

HDMI / DisplayPort (PC Mode)

Resolution	Horizontal frequency (kHz)	Vertical frequency (Hz)	Remark
800 x 600	37.879	60.317	HDMI1/2/3, DisplayPort
1024 x 768	48.363	60	
1280 x 720	44.772	59.855	
1280 x 1024	63.981	60.02	
1680 x 1050	65.29	59.954	
1920 x 1080	67.5	60	
3840 x 2160	67.5	30	
3840 x 2160	135	60	

HDMI / DisplayPort (DTV Mode)

Resolution	Horizontal frequency (kHz)	Vertical frequency (Hz)	Remark
480/60p	31.5	60	HDMI1/2/3, DisplayPort
576/50p	31.25	50	
720/50p	37.5	50	
720/60p	45	60	
1080/50i	28.1	50	
1080/60i	33.75	60	
1080/50p	56.25	50	
1080/60p	67.432	59.94	
1080/60p	67.5	60	
2160/30p	67.5	30	
2160/50p	112.5	50	
2160/60p	135	60	

NOTE

- Horizontal frequency: The horizontal interval is the time taken to display one horizontal line. When 1 is divided by the horizontal interval, the number of horizontal lines displayed every second can be tabulated as the horizontal frequency. The unit is kHz.
- Vertical frequency: The product display functions by the screen image changing dozens of times every second like a fluorescent lamp. The vertical frequency or refresh rate is the number of image displays per second. The unit is Hz.

Wireless module (LGSBWAC95) Specifications	
Wireless LAN (IEEE 802.11a/b/g/n/ac)	
Frequency range (MHz)	**Output power (Max.) (dBm)**
2400 to 2483.5 5150 to 5725 5725 to 5850	19 18 13.5
Bluetooth	
Frequency range (MHz)	**Output power (Max.) (dBm)**
2400 to 2483.5	9
• As band channels can vary per country, the user cannot change or adjust the operating frequency. This product is configured for the regional frequency table. • For consideration of the user, this device should be installed and operated with a minimum distance of 20 cm between the device and the body.	

(Only Nigeria)

Connection and use of this communication equipment is permitted by the Nigerian Communications Commission.

(Only Hong Kong)

Wireless module (LGSBWAC95) Specifications	
Wireless LAN (IEEE 802.11a/b/g/n/ac)	
Frequency range (MHz)	**Output power (Max.) (dBm)**
2400 to 2483.5 5150 to 5725 5725 to 5850	19 18 13.5
Bluetooth	
Frequency range (MHz)	**Output power (Max.) (dBm)**
2400 to 2483.5	9
• As band channels can vary per country, the user cannot change or adjust the operating frequency. This product is configured for the regional frequency table. • For consideration of the user, this device should be installed and operated with a minimum distance of 20 cm between the device and the body.	

(Only Vietnam)

Wireless module (LGSBWAC95) Specifications	
Wireless LAN (IEEE 802.11a/b/g/n/ac)	
Frequency range (MHz)	**Output power (Max.) (dBm)**
2400 to 2483.5 5150 to 5725 5725 to 5850	17.5 17.5 13.5
Bluetooth	
Frequency range (MHz)	**Output power (Max.) (dBm)**
2400 to 2483.5	9
• As band channels can vary per country, the user cannot change or adjust the operating frequency. This product is configured for the regional frequency table. • For consideration of the user, this device should be installed and operated with a minimum distance of 20 cm between the device and the body.	

(Only Philippines)

Wireless module (LGSBWAC95) Specifications	
Wireless LAN (IEEE 802.11a/b/g/n/ac)	
Frequency range (MHz)	**Output power (Max.) (dBm)**
2400 to 2483.5 5150 to 5725 5725 to 5850	18.5 18 18
Bluetooth	
Frequency range (MHz)	**Output power (Max.) (dBm)**
2400 to 2483.5	9
• As band channels can vary per country, the user cannot change or adjust the operating frequency. This product is configured for the regional frequency table. • For consideration of the user, this device should be installed and operated with a minimum distance of 20 cm between the device and the body. • FCC ID: BEJLGSBWAC95 / IC: 2703H-LGSBWAC95	

LICENCE

Supported licenses may differ by model. For more information of the licenses, visit *www.lg.com*.

HDMI™
HIGH-DEFINITION MULTIMEDIA INTERFACE

The terms HDMI, HDMI High-Definition Multimedia Interface, HDMI trade dress and the HDMI Logos are trademarks or registered trademarks of HDMI Licensing Administrator, Inc.

Manufactured under license from Dolby Laboratories. Dolby, Dolby Vision, Dolby Vision IQ, Dolby Audio, Dolby Atmos, and the double-D symbol are trademarks of Dolby Laboratories Licensing Corporation.

HEVC Advance™
Covered by patents at patentlist.accessadvance.com

The Bluetooth® word mark and logos are registered trademarks owned by Bluetooth SIG, Inc. and any use of such marks by LG Electronics Inc. is under license. Other trademarks and trade names are those of their respective owners.

The model and serial number of the product are located on the back and on one side of the product. Record them below in case you ever need service.

MODEL

SERIAL NO.

Temporary noise is normal when powering ON or OFF this device.