USER GUIDE

LG Digital Signage

(MONITOR SIGNAGE)

Please read the user manual before using this product to ensure safe and convenient use.

webOS 8.0

www.lg.com

ENGLISH

CONTENTS

SAFETY PRECAUTIONS 5

- Precautions for the AC Adapter and Power.....6
- Precautions for Moving the Product.....8
- Precautions for Installing the Product.....9
- Precautions for Cleaning the Product.....11
- Precautions for Using the Product.....12
- Precautions for Using the Remote control.....14
- Precautions for Experiencing Image Retention.....15
- Product Disposal.....15

USING THE REMOTE CONTROL..... 16

MAKING CONNECTIONS..... 19

- Connecting to a PC.....19
- External Device Connection 19
- Connecting Multiple Monitors 21

SETTINGS.....23

- Home.....23

  Global Buttons

  Dashboard

  [Content Manager]

  [Gallery Mode]
- Ez Setting.....24

  [Video Wall]

  [On/Off Scheduler]

  [SI Server Setting]

  [Pro:Centric]

  [Server Setting]

  [Fail Over]

  [Status Mailing]

  [Play via URL]

  [Setting Data Cloning]

  [Sync Mode]

  [Multi Screen]

  [LG Business Cloud]

  [Leveler Tool]

  [Office Meeting Mode]

  [webOS Partners]

- General 34
[Language]
[System Information]
[Set ID]
[Time & Date]
[Power]
[Network]
[Safety Mode]
[User Agreement]
[Advanced Setting]
- Display 48
[Select Mode]
[Brightness Settings]
[Color Settings]
[Clarity Settings]
[Select Content Type]
[Aspect Ratio]
[Rotation]
[Advanced Setting]
[Ultra HD Deep Color]
- Sound 57
[Select Mode]
[Use Main Speaker]
[Use Wired Speaker]
[Use External Speakers with Main Speaker]
[Use No Speaker]
[Advanced Settings]
[LG Sound Sync]
[Match Screen and Sound]
[Digital Sound Output]
[Audio Out]
- Admin 61
[Lock Mode]
[Change Password]
[Software Update]
[Enterprise Settings]
[Factory Reset]

CONTENT MANAGER 63

- Web Login 63
- Content Manager 63
[Player]
[Scheduler]
[Editor]
- Group Manager 2.0 72
- Gallery Mode 75
- Screen Share 76
How to Use [Screen Share]
- LG Presenter 77
How to use LG Presenter

MANAGEMENT TOOLS 78

- Control Manager 78
- Picture ID 79

TO CONTROL AN EXTERNAL PC USING TOUCH SCREEN.....80

- Connecting to a PC.....80
- Prioritized Tasks on the Touch Screen 80

IR CODE 81

CONTROLLING MULTIPLE PRODUCTS.....83

- Connecting cables.....83
- Communication Parameter 84
- Command Reference List.....85
- Transmission/Reception Protocol 90

TROUBLESHOOTING 118

To obtain the source code that is contained in this product, under GPL, LGPL, MPL, and other open source licenses that have the obligation to disclose source code, and to access all referred license terms, copyright notices and other relevant documents, please visit *https://opensource.lge.com*.

LG Electronics will also provide open source code to you on CD-ROM for a charge covering the cost of performing such distribution (such as the cost of media, shipping, and handling) upon email request to *opensource@lge.com*.

This offer is valid to anyone in receipt of this information for a period of three years after our last shipment of this product.

SAFETY PRECAUTIONS

The safety precautions are intended to prevent unexpected danger or harm by helping the user to use the product safely and for its intended purpose.

WARNING

If you ignore the warning message, you may be seriously injured or there is a possibility of accident or death.

CAUTION

If you ignore the caution message, you may be slightly injured or the product may be damaged.

Model corresponding to sentence color

COMMON	ENCLOSURE	LED

Precautions for the AC Adapter and Power

WARNING

- Use only the power cord or AC adapter provided or approved by LG Electronics, Inc. If you use another power cord, make sure that it is certified by the national standards. If the power cable is faulty in any way, please contact the manufacturer or the nearest authorized service center for a replacement.
- Operate the display only from a power source(i.e. voltage) indicated in the product specification.
  - Otherwise the product can be damaged, fire can occur or you may be electrocuted. If you are not sure what type of power supply you have, consult a certified installation company.
- Make sure the power cord connect to a properly grounded outlet.
  - If you do not you may be electrocuted or injured or the product can be damaged.
- Insert the power plug or AC adapter firmly so it cannot come loose.
  - Poor connection may cause a fire or electric shock.
- In the presence of thunder and lightning, never touch the power cord and signal cable because it can be very dangerous.
  - It can cause electric shock.
- Be careful not to step or place heavy objects (electronic appliances, clothing, etc.) on the power cord or AC adapter. Additionally, do not bend or pull out the power cord or AC adapter with excessive force.
  - Damaged power cords may cause a fire or electric shock.
- Do not connect power cord or AC adapter damaged with sharp objects to power outlet.
  - You may be electrocuted.
- Do not insert a conductor (like a metal chopstick) into one end of the power cord while the other end is connected to the input terminal on the wall. Additionally, do not touch the power cord right after it is unplugged.
  - You may be electrocuted.
- Do not use with a multi-outlet connected by many electrical product and heating devices. Use an exclusive multi-outlet with a grounding terminal.
  - A fire can break out due to overheating.

- If water or any foreign substance goes inside the product, disconnect the power cord immediately and contact the service center.
  - Otherwise, this may cause a fire or electric shock due to damage to the product.
- Keep the power cord or AC adapter away from any heating devices.
  - The cord coating may melt and cause fire or electric shock.
- Never disassemble, repair or modify the power cord or AC adapter.
  - This may cause a fire or electric shock.
- The main cutoff device is the power cord. Please make sure the product is installed near the wall outlet and that it is easily accessible.
- As long as this unit is connected to the AC wall outlet, it is not disconnected from the AC power source even if the unit is turned off.
- Power consumption will be '0' only when the power plug is unplugged.
- Use the appliance coupler as the disconnect device.

⚠ CAUTION

- If the outlet pins of the power plug or AC adapter is covered with dust, be sure to wipe them and keep them clean.
  - Overheating due to layers of dust may cause a fire or electric shock.
- If the outlet pins of the power plug or AC adapter is covered with water be sure to wipe them and keep them clean. Additionally, Do not touch the power plug or AC adapter with wet hands.
  - This may cause an electric shock.
- Do not turn the product on or off by plugging in or unplugging the power plug from the power outlet. Do not use the power socket as a switch.
  - This may cause an electric shock or product malfunction.
- Do not unplug the power cord while the product is in use.
  - Electrical shock can damage the product.

Precautions for Moving the Product

WARNING

- Contact the service center before moving the product.
  - It may cause electric shock and damage the product.
- Make sure the product is turned off, unplugged, and all cables have been removed before the product is moved.
  - You may be electrocuted or the product can be damaged.
- When moving the product, do not shock or cause an impact on the front panel.
  - You may be electrocuted or the product can be damaged.
- Use the correct number of people according to the weight of the product. (Under 25 Kg per person use lifting equipment when exceeding 100 Kg)
  - If use the damaged product again, contact the service center because it can cause electric shock or fire.
- Do not hold it upside down while holding only the stand. (It is for stand supported models only.)
  - This may cause stand warping, panel damage and other types of product damage.

CAUTION

- Do not dispose of the product-packing box. Use it when moving by putting the product in the box to carry it.

Precautions for Installing the Product

WARNING

- Contact the service center before installing the product.
  - It can cause electric shock and damage the product.
- Do not drop an object on or impact on the product. Keep out of reach of children and do not place toys or objects near the product to prevent throwing things on the product screen.
  - It can cause injury to human, problem to product and damage the display.
- Do not put heavy objects on, or hang from, the product.
  - If the product collapses or is dropped, you may be injured.
- Do not touch the surface of the product if it overheats.
  - It can cause injury to human.
- Install the product firmly fixed on a floor, wall, etc. to prepare against external impact such as wind and earthquake.
  - You must refer to the manual provided.
- Prevent Children from climbing or hanging on the product.
  - If the product collapses or is dropped, you may be injured.
- Do not install it where there are heating devices such as electrical heaters or lighting equipment.
  - Fire, electrical shock, malfunction may occur.
- Do not install this product by yourself as you may injure yourself or cause damage to the product. Please contact service engineer authorized by service center.
- Do not install this product on a wall if it could be exposed to oil or oil mist.
  - This may damage the product and cause it to fall.
- Do not leave the power or signal cable, etc. on the pathway.
  - This could cause a trip or fall, which could cause an electrical shock, fire, product breakdown, or injury.
- Do not let the product drop when connecting it to an external device connected with a short cable.
  - This may cause injury and damage to the product.
- If you drop the product or the case is broken, turn off the product and unplug the power cord and contact the service center.
  - If you continue to use without taking proper measures, electrical shock or fire can occur.
- Install the product in a dry place where it is not near dust and water. Avoid high temperatures and humidity.
  - This may cause electrical shock, fire or product damage.
- Safely install the product in a place that can hold the weight of the product.
  - A lack of strength may cause the product to fall.
- Take a comfortable and natural position to relax the muscles when working with a product.
- Do not install this product on a location that is wobbly, sloped, unstable, exposed to vibrations, or that does not safely and securely support the product to remain in place. Do not place a cloth or any other item between the product and the furniture supporting the product.
  - The product may fall down or overturn, causing an injury or malfunction.

⚠ CAUTION

- Install the product where no Electromagnetic Interference occurs.
- If you install the product in a place that does not meet the recommended conditions, this may cause serious damage to the product's picture quality, life cycle, and appearance. Please check with service engineer before installing. Please do not install the product in places such as where there is an abundance of fine dust or oil mist, chemical substances are used, exposed to direct sunlight, the temperature is very high or low, the humidity is very high.
- Make sure the product is well ventilated by Installing at a distance (100 mm or more) from the wall.
  - If you install the product too close to the wall, it may be deformed or fire can break out due to internal heat buildup.
- Do not cover the product with a tablecloth or a curtain or other materials (e.g. plastic) while plugged in. Do not block the ventilation hole of the product.
  - The product can be deformed or fire can break out due to overheating inside the product.
- Do not install the product in an area with poor ventilation (e.g. on a bookshelf, in a closet) or outside and avoid placing on cushions or carpets.
  - The product could catch fire due to overheating inside the product.
- Install the product on a flat and stable place that is large enough to support the product.
  - If the product is dropped, you may be injured or the product may be broken.
- When installing the product on a shelf or cabinet, make sure that the bottom end of the product is not protruding forward.
  - The product may fall due to unbalanced center of gravity, which may cause personal injury or damage to the product. Be sure to use cabinets or shelves that fit your product.
- A readily accessible disconnect device shall be incorporated external to the product.
- The components complied with the requirements of IEC 61643-series shall be installed internal or external to this product.
- Set to [Screen Off & Backlight (Outdoor mode)] when installing outdoors.
  - Enable the [Outdoor mode] to reduce the risk of the internal humidity and condensation.
- When operating in below zero temperature, the enclosure may not work for up to one hour to raise the internal temperature of the enclosure.

Precautions for Cleaning the Product

WARNING

- Keep the product clean at all times.
  - If you don't clean the unit for a long time and it becomes covered in dust, it can cause fire or product damage.
- When you need to clean the inside of the product, you must contact the service center.
  - Otherwise, cleaning without support may cause a fire, electric shock, or damage to the product.
- When cleaning the product, unplug the power cord and wipe gently with a soft cloth to prevent scratching.
  - An electric shock may occur or damage to the screen if its scratched.
- When you want to clean the front frame, spray water onto a soft cloth 2 to 4 times and wipe in one direction only.

  (Not for LED models, Not for health care facility equipments)
  - Too much moisture may cause staining.
- Do not physically come in contact with the screen of the LED Package.
  - This may cause damage to the product.
- To clean the product, use an air gun to lightly remove dust from the front frame and the screen.
  - If there are foreign substances in between the LEDs on the screen, it may cause a defect on the screen.

CAUTION

- When cleaning the product or the screen, unplug the power cord and wipe it gently with a soft cloth. Do not spray water or other liquids directly on the product. Especially, do not clean your product with chemicals including glass cleaner, any type of air freshener, insecticide, lubricants, wax (car, industrial), abrasive, thinner, benzene, alcohol, etc., which can damage the product or its panel.
  - This may result in fire, electric shock or product damage (deformation, corrosion or breakage).

Precautions for Using the Product

WARNING

- Do not use the product in any environment with excessively high temperatures or humidity.
  - It may cause electrical shock or damage the product.
- If you use the product for a long period of time, take a rest from time to time to protect your vision.
  - Extended viewing could result in impaired vision.
- Listening at high volume or using for a long time can cause damage to your hearing.
- In the event that liquid or a foreign object falls into the product, please switch it off and unplug it from the wall outlet and contact the service center.
  - Otherwise, the product may cause fire or electric shock.
- In the event that no image appears on the screen or no sound is heard, stop using the product. Switch it off immediately, unplug it from the power outlet and contact the service center.
  - Otherwise, the product may cause fire or electric shock.
- Do not drop an object or impact on the product or screen.
  - It can cause injury to human, problem to product and damage the screen.
- If you can smell smoke or other odors or hear a strange sound, unplug the power cord and contact the service center.
  - If you continue to use the product without taking proper measures, it may cause electrical shock or fire.
- Do not attempt to disassemble, repair or modify the product yourself. Please contact service center if you need to repair it.
  - Fire or electric shock can occur.
- Do not place objects filled with liquids such as vases, cups etc. on or over the product to prevent liquid from entering the product.
  - Failure to do so may result in fire, electric shock, malfunction or deformation.
- Do not push hard on or scratch the product's surface with your hands or sharp objects, such as nails, pencils or pens. Do not shock or scratch the front and sides of the screen with metallic objects.
  - This may damage the products and cause it to malfunction.
- Do not touch the product if it has been exposed to sunlight or an intense light because it could be hot.

- Do not use high voltage electrical goods near the product (e.g., a bug zapper).
  - This may result in product malfunction if it receives an electrical shock.
- If there is a gas leak, do not touch the outlet, and open the windows for ventilation.
  - Otherwise, the product may cause fire or electric shock.
- If you drop the product or the case is broken, turn off the product and unplug the power cord.
  - If you continue to use without taking proper measures, electrical shock or fire can occur. Contact the service center.
- Keep small accessories out of the reach of children.
  - If a child swallows it, consult a doctor immediately.
- Keep out of reach of children from the product. Also, do not throw toys or objects at the product or screen.
  - It can cause injury to human, problem to product and damage the screen.
- All the power sources must be disconnected by removing the power cables to remove all power from the unit.

⚠ CAUTION

- This panel is an advanced product that contains millions of pixels. You may occasionally see pixel spots when viewing the screen. Since these deactivated pixels are not a defect, the performance and reliability of the product is not affected.
- Do not put or store inflammable substances near the product.
  - There is a danger of explosion or fire.
- Keep the proper distance from the product.
  - It can cause damage to your vision if you look at the product too closely.
- Set the appropriate resolution and frequency by products.
  - It can cause damage to your vision.
- Take a regular break when working with the product for a long time.

Precautions for Using the Remote control

WARNING

- Avoid places with high humidity.
  - It may cause electrical shock or damage the product.
- Do not expose batteries to excessive heat, such as direct sunlight, open fireplace, and electric heaters.
  - It may cause fire and you may be injured.
- Make sure that children do not swallow the remote control batteries when you replace them. Keep batteries out of reach of children.
  - If a child swallows a battery, consult a doctor immediately.
- Do not dispose of batteries in a fire.
  - Please dispose batteries at a local recycling center or a retail store that handles batteries.
- Used batteries, which include rechargeable batteries, should be recycled separately from waste.
  - Please dispose used batteries and rechargeable batteries at a local recycling center or a retail store that handles batteries.

CAUTION

- Do not short circuit and disassemble of batteries.
  - It may cause electrical shock or fire.
- The remote control may not function properly in sunlight or under a strong lamp. Move the product if it is being used in these conditions.
- Check if there is any obstacle between the product and the remote control.
- Do not mix new batteries with old batteries.
  - Overheating or leaking batteries may cause fire or electric shock.
- Only use the specified type of battery. Do not insert batteries that are not rechargeable into the charger.
  - Overheating or leaking batteries may cause fire or electric shock.

Precautions for Experiencing Image Retention

- Displaying a still image for a prolonged period of time may cause damage to the screen, resulting in image retention. Most third-party products have the same issue. The resulting damage is not covered by the product warranty.
  - Use a screen saver when using the monitor for a prolonged period of time.

Product Disposal

- Do not dispose of this product with general household waste.
- Disposal of this product must be carried out in accordance to the regulations of your local authority.

USING THE REMOTE CONTROL

The descriptions in this manual are based on the buttons on the remote control. Please read this manual carefully to use the monitor correctly. To install batteries, open the battery cover, place batteries (1.5 V AAA) matching ⊕ and ⊖ terminals to the labels inside the compartment, and close the battery cover. To remove the batteries, perform the installation actions in reverse. The illustrations may differ from the actual accessories.

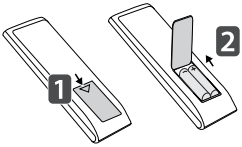

⚠ CAUTION

- Do not mix old and new batteries, as this may damage the remote control.
- Be sure to point the remote control toward the remote control sensor on the monitor.
- The product's internal and external batteries should not be exposed to excessive heat such as direct sunlight, fire, or the like.

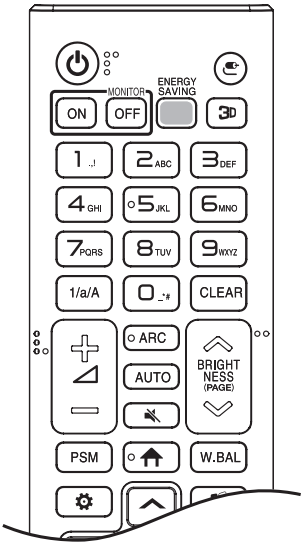

(POWER) Turns the monitor on or off.

MONITOR ON Turns the monitor on.

MONITOR OFF Turns the monitor off.

ENERGY SAVING Reduces power consumption by adjusting peak screen brightness.

(INPUT) Selects the input mode.

3D Used for viewing 3D video. (This function is not supported.)

Number and Alphabet buttons

Enters numerical or alphabetical characters depending upon the setting.

1/a/A Toggles between numerical and alphabetical. (This function is not supported.)

CLEAR Deletes the entered numerical or alphabetical character.

(Volume Up/Down Button) Adjusts the volume level.

ARC Selects the screen size.

AUTO Automatically adjusts picture position and minimizes image instability. (This is supported only for the RGB input.)

(MUTE) Mutes all sounds.

BRIGHTNESS Adjusts the brightness of the display.

(PAGE) Moves to the previous or next screen. (This function is not supported.)

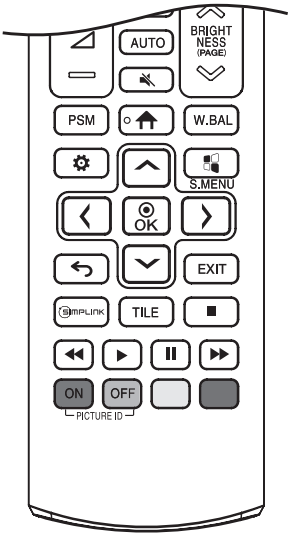

PSM Selects the Picture Mode.

(HOME) Activates the Launcher.

W.BAL Enters the White Balance menu.

(SETTINGS) Accesses the main menus or saves your input and exit menus.

S.MENU SuperSign menu key. (This function is not supported.)

, OK After selecting the menu, select and adjust functions.

(BACK) Returns to the previous level.

EXIT Closes the menu.

SIMPLINK Allows you to control various multimedia devices to enjoy multimedia simply by using the remote control through the SimpLink menu. You can control media playback when connecting to SimpLink.

TILE You can choose to turn TILE Mode on/off.

PICTURE ID ON/OFF When the Picture ID number matches the Set ID number, you can control whichever monitor you want in multi-display format.

- **ON**: Individually control the monitors with an image ID assigned to each of them.
- **OFF**: Control the monitors at once.

MAKING CONNECTIONS

You can connect various external devices to your monitor. Change the input mode and select the external device you want to connect.

For more information about external device connections, see the user manual provided with each device.

Connecting to a PC

Some of the cables are not provided.

This monitor supports the Plug and Play* feature.

* Plug and Play: a feature that enables a PC to recognize devices attached by the user without device configuration or user intervention when powering up.

External Device Connection

Connect a HD receiver, DVD, or VCR player to the monitor and select an appropriate input mode.

Some of the cables are not provided. For the best picture and sound quality, connecting external devices to your monitor using HDMI cables is recommended.

NOTE

- For the best image quality, using the monitor with HDMI connection is recommended.
- To comply with the standard specifications of the product, use a shielded interface cable with a ferrite core, such as a DVI-D/HDMI/DISPLAYPORT cable. (Applicable only to applicable models)
- If you turn the monitor on when the set is cold, the screen may flicker. This is normal.
- Sometimes red, green, or blue spots may appear on the screen. This is normal.
- Use a Ultra High Speed HDMI®/™ cable. (3 m or less)
- Use a certified cable with the HDMI logo attached. If you do not use a certified HDMI cable, the screen may not display or a connection error may occur.
- Recommended HDMI Cable Types
  - Ultra High Speed HDMI®/™ Cable
  - High Speed HDMI®/™ Cable with Ethernet
- If you cannot hear any sound in HDMI mode please check your PC settings. Some PCs require you to manually change the default audio output to HDMI.
- If you want to use HDMI-PC mode, you must set your Normal/Video to Normal mode.
- You may experience compatibility issues if you use HDMI-PC mode.
- Make sure the power cable is disconnected.
- If you connect a gaming device to the monitor, use the cable provided with the gaming device.
- Depending on the PC graphic card, the output resolution displayed on the LG Signage may different from the set resolution.

CAUTION

- Connect the signal input cable and tighten it by turning the screws clockwise.
- Do not press the screen with your finger for a prolonged period as this may result in temporary distortion on the screen.
- Avoid displaying static images on the screen for a long period of time to prevent image retention. Use a screensaver if possible.
- A wireless communication device near your monitor can affect the image.

Connecting Multiple Monitors

- Images may differ according to the model.

To use different products connected to each other, connect one end of the signal input cable (DP Cable) to the DP Out connector of Monitor 1 and connect the other end to the DP In connector of the other product.

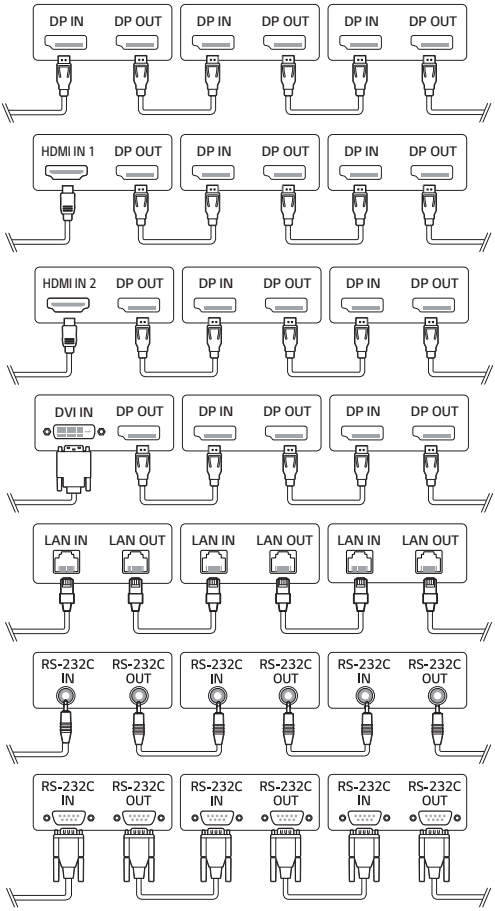

NOTE

- If the signal cable between the product and your PC is too long, make sure to use the Booster or optical cable.
- DP Cable - Use a DP cable that is certified to DP 1.1a standard or higher.
- Daisy chaining the video output may be limited depending on the performance of the input device that supports HDCP.

NOTE

- Software-related content may be changed without prior notice due to upgrades of the product functions.
- Some features described in the User Manual may not be supported in certain models and countries.
- SNMP 2.0 is supported.

SETTINGS

Home

Global Buttons

- [MOBILE URL]: Provides information necessary to access the monitor set through an external device's browser. With this feature, you can view QR code and URL information. In addition, by accessing the URL, you can also run Content Manager and Group Manager 2.0, and Control Manager. (This feature is optimized for Google Chrome.)
- [Input]: Navigate to the external input selection screen
- [Settings]: Navigate to the Settings screen

Dashboard

- This feature displays key information about your Signage monitor in the center of the home screen. In the Dashboard, you can manually change settings by selecting the corresponding items.
- [Manual Download]: Downloads a manual by scanning a QR code.

NOTE

- If the dashboard is locked, the focus does not move.
- Some QR code apps on mobile devices may not work. (You can access the page to download manuals by visiting the provided address.)

[Content Manager]

- [Player]: Play a variety of content including images, videos, and SuperSign content.
- [Scheduler]: Manage schedules for content that will be played at different times.
- [Editor]: You can create your own content using templates and media files.
- [Group Manager 2.0]: Distribute content schedules and setting data to the connected device.

[Gallery Mode]

- This mode allows you to appreciate the natural environment and famous paintings.

Ez Setting

[Video Wall]

SETTINGS / ⚙ → [Ez Setting] → [Video Wall]

Set Video Wall options to create a wide visual canvas.

- [Tile Mode]: Turn [Tile Mode] on or off.
- [Tile Mode Setting]: Display a single integrated screen on multiple Signage monitors.
- [Simple Configuration]: Automatically sets [Tile ID] based on the connection direction of the set RS232C.
  - When the [Set ID] of the connected set is complete, the performance of [Simple Configuration] is guaranteed only for the master set ([Set ID] 1).
    Run this function for the master set ([Set ID] 1).
- [Natural Mode]: Display the image excluding the area that overlaps with the monitor's bezel so that the image displayed has a more natural feel to it.
- [Frame Control]: Adjust the sets that run [Scan Inversion] and frame deviation.
  - When running [Scan Inversion], please run [Frame Control] for the sets that do not run [Scan Inversion].
- [Scan Inversion]: Reduce screen deviation between adjoining video walls by changing screen scanning method.
- [White Balance]: Configure white balance settings (White Pattern, R/G/B-Gain, and Luminance).
- [Reset]: Reset to initial settings.
- [Reboot to Apply]: Reboot the set to configure a changed Frame Control/Scan Inversion value.

NOTE

- When Tile Mode is enabled, automatically set [Frame Control] for odd numbered rows and [Scan Inversion] for even numbered rows.

[On/Off Scheduler]

SETTINGS / ⚙ → [Ez Setting] → [On/Off Scheduler]

Set a schedule to use your signage by time and day of the week.

- [On/Off Time Setting]: Set on/off times for each day of the week.
- [Holiday Setting]: Set holidays by date and by day of the week.

[SI Server Setting]

SETTINGS / ⚙ → [Ez Setting] → [SI Server Setting] → [SI Server Setting]

Set up to connect your signage to an external SI server. Set up a server environment for SI app installation.

SETTINGS / ⚙ → [Ez Setting] → [SI Server Setting] → [Developer Mode & Beanviser]

This feature provides great convenience to the app developers.

Set up to install and activate the Developer mode and Beanviser app.

NOTE

- To use these features, an account (ID/PASSWORD) for webOS Signage developer website (*http://webossignage.developer.lge.com/*) is required.

[Pro:Centric]

SETTINGS / ⚙ → [Ez Setting] → [Pro:Centric]

- Set up to connect your signage to Pro:Centric server.
- Set up Pro:Centric server environment for SI app installation.

[Server Setting]

SETTINGS / ⚙ → [Ez Setting] → [Server Setting]

Set up to connect your signage to a SuperSign server.

- SuperSign CMS
- Supersign Control+

[Fail Over]

SETTINGS / ⚙ → [Ez Setting] → [Fail Over]

Set the priority of the input devices when a fault occurs. Automatically play the content stored in the device or run the set app.

- [On/Off]: Turns [Fail Over] on or off.
- [Auto Switching]: Automatically switches to an input device with a valid signal when the device is connected. If there is no input signal or the app is closed, it automatically switches to the most recently used external input or app. Apps supporting automatic switching, other than external inputs, include SuperSign content, SI app, and Play via URL.
  - [On]: Turns on the [Auto Switching] feature. If a valid signal is already connected when [On] is selected or when the power is turned on, the input device is included in the usage history. When multiple input devices are connected, the usage history is defined in a random order.
  - [Off]: Resets the history of recently used external inputs or apps and will not switch automatically, even if an input device is connected. Performs the same action as [Off], even when the menu is disabled or the power is off. Enables the [Input Priority], [Action Mode], and [Play Backup Content] items.
- [Input Priority]: Sets the priority of input devices in the case of failure.
  - [Auto]: Sets priorities according to the defined input mode order.
  - [Manual]: Allows you to set the priority order of input modes.
- [Action Mode]: Choose whether to revert to a higher priority input mode or maintain the current one when there is no failure.
  - [Return]: Automatically switches to the highest priority input mode with a valid signal if multiple input devices are connected simultaneously.
  - [Hold]: Maintains the current input mode if there is no failure.
- [Play Backup Content]: When there is no input signal, this feature automatically plays the content stored in the device or runs the set app. When set to [On], [Auto Capture Images], [Media Storage], [SuperSign Content], and [SI App / Play via URL] items are activated.
  - [Auto Capture Images]: When the automatic input switches due to taking screenshots of an image or video that is playing at regular intervals, this feature will play back the file. (OLED model is not supported.)
    -> Capture time Interval: The time interval can be set to 30 min, 1 hour, 2 hours and 3 hours.
  - [Media Storage]: When the automatic input switches due to the image and video file being uploaded, the feature will play back the file.
    -> [Backup media select]: Using the settings button, you can upload a single file in the internal / external memory.
    -> [Preview]: You can preview the uploaded file.
  - [SuperSign Content]: When the automatic input switches, this feature will play the file(s) distributed in SuperSign CMS or SuperSign Cloud.
  - [SI App / Play via URL]: Run SI App or Play via URL when automatic input switch occurs.
    -> [SI App]: SI App behavior depends on the settings from [SI Server Setting] menu in [Ez Setting].
    -> [Play via URL]: Play via URL behavior depends on the settings from [Play via URL] menu in [Ez Setting].
    -> If both [Play via URL] and [SI Server Setting] can be run, it runs [Play via URL] when automatic input switch occurs.
- [Reset]: Reset to initial settings.

NOTE

- When the [Auto Switching] feature is enabled, changes in input mode are recorded in the usage history only if they occur through [Auto Switching]. When the input mode is manually changed, it is not recorded in the usage history.

[Status Mailing]

SETTINGS / ⚙ → [Ez Setting] → [Status Mailing]

This feature configures the system so that the status of the device is assessed and then notified to the administrator by e-mail.

- [On/Off]: Turns [Status Mailing] on or off.
- [Scheduled Mailing], [When a failure occurs]: Sets the email sending interval.
- [User E-mail Address]: Set the user email address of the sender.
- [Sending Server(SMTP)]: Set the address of the SMTP server.
- [ID]: Enter the account ID of the sender.
- [Password]: Enter the password for the sender's account.
- [Receiver E-mail Address]: Set the email address of the recipient.
- [Send message]: Immediately assess the status of the device and deliver the information to the specified email address.
- [Reset]: Reset to initial settings.

NOTE

- If the status regarding any of the following items changes or becomes abnormal, a status message can be sent.
  - 1. Temp. Sensor: If the set reaches a dangerous temperature, its current temperature is recorded, and an email containing such information is sent.
  - 2. Temp. Sensor Validation: An email is sent if there is no temperature sensor connected, if the communication status of the temperature sensor is unknown, or if the information provided by the chip provider is abnormal.
  - 3. LAN Status, WiFi Status: An email is sent when the network's connection status is changed. The maximum number of network status changes that can be saved is limited to 50. The saved value is reset once the power turns off.
  - 4. No Signal Check: Checks whether there is a signal. If there are no signals for more than 10 seconds, an email is sent.
  - 5. Schedule Play Status: An email is sent if content cannot be played between the scheduled start time and end time in either Content Management Schedule status or SuperSign Content status. However, this does not apply when terminated using the remote control.
  - 6. Fail Over Status: An email is sent in case of failure or automatic switch to the input device with the highest priority. (Input switches by the user (RC, RS232C, SuperSign) are excepted.)
  - 7. Motion Detection Status: When the product detects movement or shock caused by the external environment, an e-mail is sent to you.
  - 8. Angle Detection Status : An e-mail is sent if a change in inclination is detected in the product, such as tilting or tipping over. (Supported features may vary by model.)
- Only SMTP ports 25, 465, and 587 are supported.
- The occurrence of internal input switches, excluding external input switches (RC, RS232C, SuperSign), are considered as Fail Over Status.
- One email containing the "Failover status: Failover" message is sent when switching to Fail Over Status, and the following status emails sent regularly or upon status changes contain the message "Failover status: None".

[Play via URL]

SETTINGS / ⚙ → [Ez Setting] → [Play via URL]

Play content you want to play automatically through the built-in web browser.

- [URL Loader]: Turns [Play via URL] on or off.
- [Set URL]: Enter the URL address to display automatically.
- [Preview]: Preview your desired website by accessing the specified URL.
- [Save]: Save the specified URL.
- [Reboot to Apply]: Restarts the monitor set after saving the specified URL.
- [Reset]: Reset to initial settings.

NOTE

- This feature does not apply when [Screen Rotation] is enabled, and using this feature disables [Preview].
- If [Time & Date] is not set to [Set Automatically], website navigation may be difficult.
  - **SETTINGS / ⚙** → Check [General] → [Time & Date] → [Set Automatically]

[Setting Data Cloning]

SETTINGS / ⚙ → [Ez Setting] → [Settings Data Cloning]

This feature is used to copy and import the settings of the device to other devices.

- [Export Setting Data]: Export the settings of the device to another device.
- [Import Setting Data]: Import the settings of another device into the device.

NOTE

- You must enter an admin password to use this feature.

[Sync Mode]

SETTINGS / ⚙ → [Ez Setting] → [Sync Mode]

Sync up time and content among multiple signage.

- [RS-232C Sync]: Sync up multiple signage connected by RS-232C.
- [Backlight Sync]: Shares values to control backlights using illumination sensors between devices connected by RS-232C.
- [Network Content Sync]: Sync up multiple signage connected to the same network.

[Multi Screen]

SETTINGS / ⚙ → [Ez Setting] → [Multi Screen]

This feature allows you to view multiple external inputs and videos on a single screen.

PIP Mode	PBP Mode
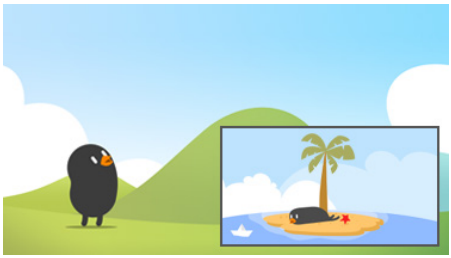	
3-Screen Split Mode	**4-Screen Split Mode**
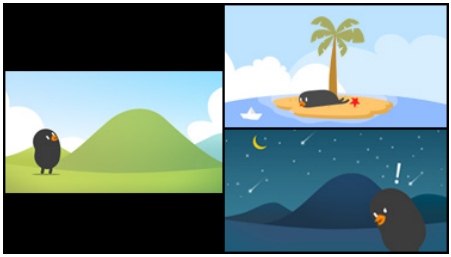	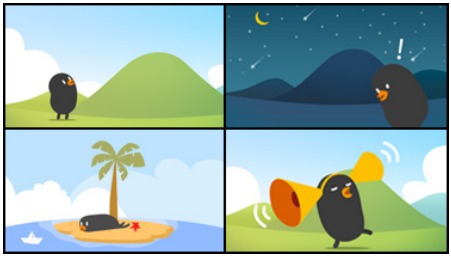

NOTE

- In multi-screen mode, the DP daisy chain feature is not supported.
- The number of split screens you can have may vary depending on the model.

Selecting Screen Layout

When you enter multi-screen mode without having set any screen layout, the screen layout selection menu appears. When the screen layout selection menu is not displayed on the screen, go to the screen layout menu bar by pressing the up arrow key on your remote control and select your desired screen layout.

Closing Screen Layout Menu

From the screen layout menu, press the up arrow key on the remote control to go to the screen layout menu bar and select it or press the back key to close the screen layout menu.

Changing Screen Input

Press the button on the top right of each split screen to select the desired input.

NOTE

- Inputs which have already been selected for other split screens cannot be selected again. To select them, press the RESET button to reset the inputs for all screens first.
- The PIP mode works only when Screen Rotation is set to Off or 180°.
- Interlaced formats are not supported. E.g. 1080i
- Supported max resolution and framerate may very depending on model.
- There may be additional restrictions on media depending on the codec combination.
- Some Full HD models only support PIP and PBP modes, and the maximum supported resolution is 1920 x 1080.
- The number of external inputs that can be played simultaneously on Multi Screen may vary depending on the model.

Playing Videos on Split Screens

Press the button on the upper right of each split screen, select Video File, and then select a storage device to view the list of videos in the selected device. Next, select your desired video from the list to play it.

NOTE

- Videos created with HEVC, MPEG1,2,4, H.264, VP8 or VP9 codecs can be played on split screens. When using PIP mode, the following combinations cannot be used.

Main	Sub
HEVC	HEVC
H.264	HEVC
MPEG2	HEVC
VP9	VP9
H.264 4K	MPEG2
H.264 4K	VP9

- The limitations of 3 and 4-screen split are as below.

When Using 4K	It supports only up to 2 videos. A combination of max. 4K @ 60 fps + 2K @ 60 fps is available. However, H.264 4K supports max. 30 fps.	
When Using Only 2K	60fps	You can combine up to 1 MPEG2, 2 H.264, and 4 other codecs.
	30fps	You can combine up to 2 MPEG2 and 4 other codecs.

- Recommended Framerate: 24, 25, 30, 60 (including 23.9, 24.9, 29.9, 59.9)
  We do not guarantee performance when you play contents with other framerates.

[LG Business Cloud]

SETTINGS / ⚙ → [Ez Setting] → [LG Business Cloud]

You can install the [LG Business Cloud] solution for fault diagnosis and prediction service.

- [Installation Type]: Selects the type to install the [LG Business Cloud] solution.
- [Installation Code]: Installs the [LG Business Cloud] solution using the number provided by each workspace created in [LG Business Cloud].
- [QR Code]: Installs the [LG Business Cloud] solution on a mobile device by scanning [QR Code].
- [Install]: Installs the [LG Business Cloud] solution.
  1) [Enter Installation Code]: Enters the 6-digit installation code to install the [LG Business Cloud] solution.
  - When the installation code is entered, the workspace information corresponding to the installation code is obtained.
  - If the installation code is not registered, [The installation code is invalid.] is displayed, and you cannot continue to install the solution.

  2) [Confirm Installation Code]: Displays the installation code and the workspace information corresponding to the installation code.
  - If the installation code is registered, the workspace information corresponding to the installation code is displayed, and you can continue to install the [LG Business Cloud] solution.
- [Workspace]: Displays the user's currently connected business and workspace information.
- [Account]: Displays user's currently connected account name.
- [Version]: Displays the version of the [LG Business Cloud] solution.
- [Details]: Displays the version of supported solutions.
- [Server Status]: Displays the status of connection between the set and server.
  - [Connected]: Displayed when the set and server are connected.
  - [Not Connected]: Displayed when the set and server are disconnected.
  - [Waiting for Approval]: Displayed when the server is waiting for approval.
  - [Rejected]: Displayed when the server rejected the connection.
- [Security Log]: Set whether to send log for STMS (Security Threat Management System).
- [Reset]: Resets the installed [LG Business Cloud] solution.

[Leveler Tool]

SETTINGS / ⚙ → [Ez Setting] → [Leveler Tool]

You can check the horizontal and vertical level status when installing the product.

Check the tilt of the product

- The bubble and angle indicator in the leveler show the degree of tilt of the product.
- The leveler and angle indicator on the left side of the screen show the degree of left or right tilt.
- The leveler and angle indicator on the right side of the screen show the degree of front or back tilt.

NOTE

- When the product is tilted more than 5 degrees in any direction, a flashing arrow indicates the direction to adjust the product to make it level.
- The reference point of the horizontal tilt may depend on the model.

[Office Meeting Mode]

SETTINGS / ⚙ → [Ez Setting] → [Office Meeting Mode]

You can set up Quick Functions to use the product in a conference room.

- Office Meeting Mode: Turning on this feature enables you to set functions related to the conference room meeting mode.
- Meeting Guide Screen
  - Meeting Guide Screen: Turning on this feature will allow you to use the conference information screen. This feature is for displaying a background image when there is no external input. Turning it on will turn on the [No Signal Image] feature.
  - Meeting Room Name: When the conference information screen is on, you can change the conference room name displayed on the screen or select whether or not to display the conference room name.
  - Time: When the conference information screen is on, you can select whether or not to display the current time on the screen.

- Advanced Settings
  - Auto Bright: Turning on this feature will automatically adjust the monitor screen brightness to match the surrounding environment.
  - Picture Mode: Set the same picture mode for all external input supported by this product.
  - Input Auto Switching: Automatically switches to an input device with a valid signal when the device is connected. If there is no input signal or the app is closed, it automatically switches to the most recently used external input or app. Apps supporting automatic switching, other than external inputs, include SuperSign content, SI app, and Play via URL. When set to [Off], or if the menu is inactive or the power is off, the history of recently used external inputs or apps will be reset. After turning on this feature or the power, usage history will be saved based on the connected input devices and the [Ez Setting] → [Fail Over] feature will be disabled.
    -> [SI App]: The SI app operates according to the settings in the [SI Server Setting] menu in [Ez Setting].
    -> [Play via URL]: Play via URL operates according to the settings in the [Play via URL] menu in [Ez Setting].
    -> Changes in input mode are recorded in the usage history only if they occur through Input Auto Switching. When the input mode is manually changed, it is not recorded in the usage history.
  - Auto Power Off: Switch the power off automatically. When this feature is turned on, the [No Signal Power Off (15 Min)] and [No IR Power Off (4 hour)] features will be turned on.
  - Edit Input Name: Change the name of each external input.
  - Presentation Timer: Use the presentation timer. Turning on this feature will display the [Presentation Timer] on the screen for selecting an external input.
    -> **INPUT /** → [Presentation Timer]
    -> The time of operation can be set up to 120 minutes in intervals of ten minutes. When the time has been set, press [Start] to begin the timer.
    -> Press the yellow button on the remote control to pause the timer. When the timer is paused, the time is displayed in blue.
    -> Press the yellow button on the remote control to restart the timer.
    -> The time is displayed in red when the remaining time is less than three minutes. The time will blink when the remaining time is less than one minute.
    -> Press the blue button on the remote control to end the timer.
    -> The UI will disappear automatically ten minutes after the timer has ended.
    -> The product may turn off while the timer is still in operation due to the auto-off and power saving settings.

NOTE

- If the No Signal image has been downloaded, turning on [Meeting Guide Screen] will display the downloaded image first when there is no signal.
- If using the [Meeting Room Name] and [Time] items in the [Meeting Guide Screen], and if using the downloaded image as the No Signal image, it is recommended to use a brightly-colored image in accordance with the optimal resolution of the Signage model.

[webOS Partners]

SETTINGS / ⚙ → [Ez Setting] → [webOS Partners]

This is a function for installing webOS partners' apps.

The desired app can be installed by selecting it.

General

[Language]

SETTINGS / ⚙ → [General] → [Language]

You can select the menu language to be displayed on the screen.

- [Menu Language]: Sets the language of your Signage monitor.
- [Keyboard Languages]: Sets the language of the keyboard displayed on the screen.

[System Information]

SETTINGS / ⚙ → [General] → [System Information]

This feature displays information such as the device name, software version, and storage space.

[Set ID]

SETTINGS / ⚙ → [General] → [Set ID]

- [Set ID] (1-1000): Assigns a unique Set ID number to each product when several products are connected via RS-232C. Assign numbers ranging from 1 to 1000 and exit the option. You can control each product separately by using the Set ID you assigned to each product.
- [Auto Set ID]: Automatically assigns a unique Set ID number to each product when several products are connected for display.
- [Reset Set ID]: Reset the Set ID of the product to 1.

[Time & Date]

SETTINGS / ⚙ → [General] → [Time & Date]

This feature enables you to view and change the time and date on the device.

- [Set Automatically]: Set [Time] and [Date].
- [Daylight Saving Time]: Set the start and end times for Daylight Saving Time. The DST start/end times function only when you set them more than one day apart from each other.
- [NTP Server Setting]: Allows you to set other NTP servers other than the basic NTP server.
- [Time Zone]: Allows you to change the time zone based on continent, country/region, city or user settings.

[Power]

SETTINGS / ⚙ → [General] → [Power]

Power-related feature settings

[No Signal Power Off (15 Min)]

Set whether to use the 15 Min Auto Off feature.

- You can set this option to [On] or [Off].
- If you set this feature to [On], the product turns off after it's remained in No Signal status for 15 minutes.
- If you set this feature to [Off], the 15 Min Force Off feature is disabled.
- It is recommended that you set this feature to [Off] if you intend to use the product for long periods of time as the feature turns the power of the product off.

[No IR Power Off (4 hour)]

Set whether to use 4 Hours Off feature.

- You can set this option to [On] or [Off].
- If you set this feature to [On] the product turns off if there is no input from the remote control for 4 hours.
- If you set this feature to [Off], the 4 Hours Off feature is disabled.
- It is recommended that you set this feature to [Off] if you intend to use the product for long periods of time as the feature turns the power of the product off.

[DPM (Standby Mode)]

Set the Display Power Management (DPM) mode.

- If this feature is not set to [Off], the monitor will enter DPM mode when there is no input signal.
- If you set this feature to [Off], [DPM (Standby Mode)] is disabled.

NOTE

- For some LED models, when [PM Mode] is set to [Power Off(Default)], the Energy Saving mode remains enabled even when there is an input signal.

[DPM (Standby Mode) Wake Up Control]

Turns on the set according to the digital signal processing of the connected DVI-D/HDMI/DP port.

- When set to [Clock], the set only checks for digital clock signals and turns on once it finds the clock signal.
- When set to [Clock+DATA], the set turns on if the digital clock and data signals are both input.

NOTE

- Some models may not be supported.

[PM Mode]

- [Power Off (Default)]: Set the normal DC off mode.
- [Sustain Aspect Ratio]: The PC retains the Extended Display Identification Data (EDID) even when the power is off.
- [Screen Off]: Switches to [Screen Off] status when entering DPM or Auto Power Off (15 min, 4 hours) mode.
- [Screen Off Always]: Switches to [Screen Off] status when entering DPM, Auto Power Off (15 min, 4 hours) or Off Time Scheduling mode, or when there is input from the remote control's Power button or the monitor's Off button.
- [Screen Off & Backlight On]: Partially turns on the backlight to keep the display at a proper temperature when in Screen Off status.
- [Network Ready]: Monitor is turned off, but you can control power internally through the network.

NOTE

- In order for the screen to switch from [Screen Off] to On status, there must be input from the remote control's Power or Input button, or the monitor's On button.

[Power On Delay](0-250)

- This feature prevents overload by implementing a power-on delay when multiple monitor sets turn on.
- You can set the delay interval in the range of 0 to 250 seconds.

[Power On Status]

- Select the operating status of the monitor when the main power has turned on.
- You can choose from among [PWR (Power On)], [STD (Standby)] and [LST (Last Status)].
- [PWR (Power On)] keep the monitor powered on when the main power has turned on.
- [STD (Standby)] switch the monitor to Standby status when the main power has turned on.
- [LST (Last Status)] switches the monitor back to its previous status.

[Wake On LAN (Networked Standby Mode)]

- Set whether to use [Wake On LAN (Networked Standby Mode)].
- You can set the feature to On or Off for each wired/wireless network.
- [Wired]: When set to [On], the [Wake On LAN (Networked Standby Mode)] feature is enabled, letting you turn the product on remotely through a wired network.
- [Wireless]: When set to [On], the [Wake On LAN (Networked Standby Mode)] feature is enabled, letting you turn the product on remotely through a wireless network.

[Power Indicator]

- This function enables you to change the [Power Indicator] settings.
- Setting to [On] will turn on [Power Indicator].
- Setting to [Off] will turn off [Power Indicator].
- Regardless of [On] or [Off] settings in [Power Indicator], [Power Indicator] will be turned on for approximately 15 seconds.

[Power On/Off History]

Display the device's power on/off history.

[Quick Start+]

This setting puts your monitor in standby mode when it's turned off so it will help using monitor's functions quicker when you turn the monitor back on.

- Some models may not be supported.
- Turning this option on may increase energy consumption.

[Network]

SETTINGS / ⚙ → [General] → [Network]

[Wired Connection (Ethernet)]

- Wired Connection: Connects the monitor to a local area network (LAN) via the LAN port and configures wired network settings. Only wired network connections are supported. After setting up a physical connection, the display will automatically connect without any adjustments on most networks. A small number of networks may require the display settings to be adjusted. For detailed information, contact your Internet provider or consult your router manual.

- 802.1X EAP: Authentication based on IEEE 802.1X is available for wired connection. Select the desired EAP type and Phase 2 Authentication, enter the ID/Password registered with the authentication server, and press the CONNECT button to attempt the connection.

[Wi-Fi Connection]

If you have set your monitor up for a wireless network, you can view and connect to available wireless Internet networks.

- [Add a Hidden Wireless Network]: You can add a wireless network by manually typing in its name.
- [Connect via WPS PBC]: Press the button on the wireless router that supports PBC to easily connect to the router.
- [Connect via WPS PIN]: Enter the PIN number in the web page of the PIN-supporting wireless router to connect to the router in a simple manner.
- [Advanced Wi-Fi Settings]: When there is no available wireless network displayed on the screen, you can connect to the wireless network by entering the network information directly.

[Certificate Download]

- Download the certificates used for 802.1X EAP stored in USB.
- Only pem file extension can be downloaded.

NOTE

- IPv6 connection only supports automatic connection.

[SoftAP]

If you set up a SoftAP, you can connect many devices via a Wi-Fi connection without a wireless router and use wireless Internet.

- The SoftAP and Screen Share features cannot be used at the same time.
- Wi-Fi Channel: You can directly select a Wi-Fi channel.
- SoftAp Access Information
  - SSID: A unique identifier necessary to make a wireless Internet connection
  - Security Key: The security key you enter to connect to the desired wireless network
  - Connected Devices Count: Shows the number of devices currently connected to your Signage device via a Wi-Fi connection. Up to 10 devices are supported.

[Ping Test]

Check your network status with the ping test.

[Port Control]

Unused ports can be blocked for network security.

[Connection Domain]

Change domain for checking network connection.

NOTE

- A reboot is recommended for the settings to be applied properly.

Tips for Network Settings

- Use a standard LAN cable (Cat7 with an RJ45 connector) with this display.
- Many network connection problems during set up can often be fixed by re-setting the router or modem. After connecting the display to the home network, quickly power off and/or disconnect the power cable of the home network router or cable modem, Then power on and/or connect the power cable again.
- Depending on the Internet service provider (ISP), the number of devices that can receive INTERNET service may be limited by the applicable terms of service. For details, contact your ISP.
- LG is not responsible for any malfunction of the display or Internet connection failures due to communication errors/malfunctions associated with your Internet connection or other connected equipment.
- LG is not responsible for problems within your INTERNET connection.
- You may experience undesired results if the network connection speed does not meet the requirements of the content being accessed.
- Some INTERNET connection operations may not be possible due to certain restrictions set by the Internet service provider (ISP) supplying your Internet connection.
- Any fees charged by an ISP including, without limitation, connection charges are your responsibility.

NOTE

- If you want to access the Internet directly on your display, the INTERNET connection should always be on.
- If you cannot access the Internet, check the network conditions from a PC on your network.
- When you use Network Setting, check the LAN cable or check if DHCP in the router is turned on.
- If you do not complete the network settings, the network may not function correctly.

CAUTION

- Do not connect a modular phone cable to the LAN port.
- Since there are various connection methods, please follow the specifications of your telecommunication carrier or INTERNET service provider.
- Network setting menu will not be available until the display connected to physical network.

Tips for When Configuring Wireless Network Settings

- The wireless network may be affected by interference from a device that uses 2.4 GHz frequency, such as a wireless telephone, Bluetooth device or microwave. Interference may also be caused by a device that uses 5 GHz frequency such as Wi-Fi devices.
- The wireless network service may run slowly depending on the surrounding wireless environment.
- Some devices may have a network traffic jam if any local home networks are turned on.
- To connect to a wireless router, a router that supports wireless connection is necessary; the wireless connection function of the corresponding router must also be activated. Ask the router manufacturer whether the router supports wireless connection.
- To connect to a wireless router, verify the SSID and security settings of the wireless router. Please refer to the user guide of the corresponding router regarding SSID and security settings of the wireless router.
- The monitor may not work properly if network devices (wired/wireless router or hub, etc.) are incorrectly set up. Be sure to install the devices correctly by referring to their user guides before configuring the network connection.
- The connection method may vary according to the manufacturer of the wireless router.

[Safety Mode]

SETTINGS / ⚙ → [General] → [Safety Mode]

Set to this function for safe performance.

[ISM Method]

If a still image is displayed on the screen for an extended period of time, image sticking can occur. The ISM method is a feature that prevents image sticking.

[Mode]

- Sets the [ISM Method] mode.
- [Off]: Disable the Brightness Control function.
- [Orbiter]: To prevent afterimage on the screen, the screen location moves by 4 pixels in a regular order. (This item is inactivated when the current input is No Signal.) (It only supports the models for exterior use.)
- [White Wash]: Displays a white pattern to remove image sticking.
- [User Image]: Plays the desired image from a USB.
- [User Video]: Plays the desired video from a USB.

Repeat Daily

- [Off, Just 1 Time]: Select this mode and click Complete to run the ISM function immediately.
- [On]: Performs the ISM function for the amount of time set in duration if the still image is maintained for the period set in standby.
- [On, with moving detection]: It only applies in the [Orbiter] mode. When the still image remains for the [StandBy] time, the afterimage prevention function works for the [Duration] time.
- [On, without moving detection]: It only applies in the [Orbiter] mode. When you tap the [DONE] button, the afterimage prevention function immediately applies and operates continuously.
- [Schedule]: Enable the ISM feature from start time to end time on the set day.

[StandBy]

- You can set the period between 1 and 24 hours.
- This option is available only when [Repeat] is set to [On].
- The ISM function is performed if the still image is maintained for the set period.

[Duration]

- You can select from among 1 - 10 min / 20 min / 30 min / 60 min / 90 min / 120 min / 180 min / 240 min.
- This option is available only when [Repeat] is set to [On].
- The ISM function is performed for the set time.

[Repeat Day]

- You can set the date.
- This option is available only when [Repeat] is set to [Schedule].

[Start Time]

- Set the Start time.
- This option is available only when [Repeat] is set to [Schedule].
- You cannot set the same time for Start time and End time.

[End Time]

- Set the End time.
- This option is available only when [Repeat] is set to [Schedule].
- You cannot set the same time for Start time and End time.

[User Image Download]

- In order to download an image, there must be an image file in “ISM” folder on your USB storage device.
- Delete the existing images stored on internal memory before downloading a new image file.
- Supported image file formats: BMP, JPG, JPEG and PNG
- You can download up to 4 images. (Supports resolutions of 1920 x 1080 or lower)
- If a bar image is deleted or does not exist, the default image is used. (The default image is a white background image.)
- This option is only available when [User Image] is selected.

[Action Cycle]

You can select from among 1 - 10 min / 20 min / 30 min / 60 min / 90 min / 120 min / 180 min / 240 min.

- This option is only available when [Orbiter] is selected.
- [Orbiter]: The screen location moves at every set interval.

[User Video Download]

- In order to download a video, there must be a video file in the “ISM” folder on your USB storage device.
- Delete the existing contents stored on the internal memory before downloading a new video file.
- Supported video file formats: “MP4”, “AVI”, “MKV”, “MPEG”, “TS”
- You can download only 1 video.
- If a video is deleted or does not exist, the default video is used. (The default video is a white background image.)
- This option is only available when [User Video] is selected.

*** How to reset or delete User Image / User Video**

- Reset using **SETTINGS /** ⚙ → [Admin] → [Factory Reset]
- Open the Player app → Click "Delete" button at the top right of the screen → Delete downloaded image / video

[User Agreement]

SETTINGS / ⚙ → [General] → [User Agreement]

Check the terms and conditions or change whether to agree or not.

[Advanced Setting]

SETTINGS / ⚙ → [General] → [Advanced Setting]

[Beacon]

- This option enables BLE Beacon, one of Bluetooth 4.0's features.
- Beacon Mode (On/Off Toggle): Enables the Beacon feature.
- The LG Beacon/iBeacon/Eddystone Type Beacon features are supported.
- iBeacon
  - Beacon UUID (hex): Set the UUID.
    1. Field1: 4byte hex value (8 digits)
    2. Field2: 2byte hex value (4 digits)
    3. Field3: 2byte hex value (4 digits)
    4. Field4: 2byte hex value (4 digits)
    5. Field5: 6byte hex value (12 digits)
  - Major (0–65535): Sets the Major value.
  - Minor (0–65535): Sets the Minor value.
- Eddystone
  - Frame: Set UUID or URL.
    1. Setting the UUID method
       - Beacon UUID (hex): Set the UUID.
         1 - Field1: 10byte hex value (20 digits)
         2 - Field2: 6byte hex value (12 digits)
    2. Setting the URL method
       - URL Prefix: Sets the prefix of the URL.
       - URL Suffix: Set the suffix of the URL.
       - URL: Enter the part of the URL that excludes the prefix and suffix.
       - URL string length is limited to 15 characters.
- [Check] button: The button used to complete and apply the Beacon settings.

NOTE

- Some models do not support background screening services in iOS.
- A reboot is recommended for the settings to be applied properly.
- The UUID value is hexadecimal and the exact number of digits must be entered.
- The distance to Beacon may vary depending on the device.
- The distance to Beacon may vary depending on the application used in the device.
- The Beacon function is affected by radio waves because it employs the Bluetooth Low Energy (BLE) technology. If the wireless environment in the 2.4GHz band is poor, it may not function properly.
- When you set iBeacon, LG Beacon will be set to be the same as the value of iBeacon field. But the LG Beacon setting item won't be provided separately.

[Control Interface]

Devices connected to the display can be controlled via the interface.

- [PC/OPS Power Control]: Enable you to control the power of PC or OPS as you turn the display on and off.
  - [Disable]: Disable [PC/OPS Power Control].
  - [Sync(On)]: Set the PC/OPS power to be turned on when the display is turned on.
  - [Sync(On/Off)]: Set the PC/OPS power to be turned on when the display is turned on and set the PC/OPS power to be turned off when the display is turned off.
- [Control Interface Selection]: Select the serial communication path between the display and the connected devices.
  - [Display]: Serial communication is available via a display RS-232C IN terminal.
  - [OPS]: Serial communication is available with the OPS installed in the display.
  - [HDBaseT]: Serial communication is available with the display via HDBaseT equipment.

NOTE

- Depending on the model, it can be displayed as [PC/OPS Control].
- Depending on the supported interface, the sub-menu of [Control Interface Selection] may be different.
- The PC products that support the power control are MP500/MP700, and you have to purchase them separately if necessary.
- If you change [Control Interface Selection], the [RS232C SYNC] feature of [Sync Mode] may be restricted.
- It may not be supported depending on the model.

[Background Image]

This feature enables you to set the default background image.

- [Booting Logo Image]: Change the logo image that appears when the device boots up. If you set this option to Off, no logo image appears when the device boots up. Download or initialize an image file on the storage device.
- [No Signal Image]: Change the image that appears when there is no signal. If you set this option to Off, no image appears when there is no signal. Download or initialize an image file on the storage device.

NOTE

- To download an image, an image file must exist in a folder named “LG_MONITOR” or “lg_monitor” in the external memory (USB).
- Supported image file formats: “BMP”, “JPG”

[SIMPLINK Setup]

- This function enables SIMPLINK. ([Off], [On])
- [Device ID]: It can limit the device connected via SIMPLINK. ([All], [1] ~ [E])
- [Standby]: It can control sending and receiving PowerOff command. ([All], [Send Only], [Receive Only], [Off])

[Crestron]

(Depending on model)

[Crestron Connected] V1

- This function enables synchronization with applications provided by Crestron.
- [Server]: This menu sets the server's IP address for the network connection with the server (equipment provided by Crestron).
- [Port] (1024~65535): This menu sets the port for the network connection with the server. The default port number is 41794.
- [IP ID] (3-254): This menu sets a unique ID for synchronizing with the application.

[Crestron Connected] V2

- The connection status of the server type shall be indicated by pictures and phrases. (Disconnected, Connecting, Connected)
- [Type]: You can select the server type you want to connect to (Off, Control System, Virtual Control, Fusion)
- [CONNECT]: If you press the button once, a set tries to connect to the server and the button phrase is changed into [DISCONNECT]. In this case, the upper items are immutable. To disconnect and change upper items, pressing the button again is needed.
- Information for connecting with the server
  - [Type]: Control System
    - [Server]: Enter the IP information of the server
    - [Port]: Enter the Port information for the server
    - [IP ID]: A unique ID that distinguishes crestron equipment from server
  - [Type]: Virtual Control
    - [Room ID]: A unique ID that distinguishes room from server. If the [IP ID] is the same, but the [Room ID] is different, the server recognizes it as a different Crestron equipment.
    - [Server], [Port], [IP ID] are the same as Control System's.

- [Type]: Fusion
  - [Method]: Connection direction can be selected. ([Device to Fusion], [Fusion to Device])
    - [Device to Fusion]: How to connect from set to server
      - [URL]: Server URL
      - [Port]: Server Port
    - [Fusion to Device] : How to connect from server to set

- [Auto Discovery]: The ability to locate other Crestron equipment in the network
- [SSL]: Communication security with server can be established. The following items are meaningful only at [SSL] on
  - [User], [Password]: When the [Authentication] function is turned on on the server, [User] and [Password] must be entered to connect with the server.
  - [Verify Certificate]: A feature that checks whether a certificate installed on a server is valid. If it is not valid, it does not connect to the server
  - [Certificate Download]: The certificate must be stored in the set to perform the [Verify Certificate] function. Only certificates with extensions .pem, .crt in the USB root directory are recognized and can be added or deleted through the menu. All certificates stored at the time of [Factory Reset] are deleted.

[XiO Cloud]

- The connection status with [XiO Cloud] is displayed. (Disconnected, Connecting, Connected)
- [CONNECT]: If you press the button once, a set tries to connect to the server and the button phrase is changed into [DISCONNECT]. To disconnect, pressing the button again is needed.

[USB2 to HDBaseT]

This function transfers the data received from the USB2 terminal of the display to HDBaseT.

- [On]: Transfer the data of the device connected to USB2 to the HDBaseT equipment.
- [Off]: Receive the data of the HDBaseT equipment to Signage.

NOTE

- The HDBaseT function will be temporarily interrupted when the setting is changed.

[Quiet Mode]

This mode is used to reduce the noise of the fan.
Adjusted to the set fan control and brightness.

[Power On Default]

Set a default app when turning device on.

Display

[Select Mode]

SETTINGS / ⚙ → [Display] → [Select Mode]

[Mode]

This feature enables you to choose the optimal picture mode for your installation environment.

- [Mall/QSR], [Transportation], [Education], [Gov./Corp.]: Display the picture optimally for your installation environment.
- [General]: Display the picture at normal contrast, brightness, and sharpness.
- [Auto Power Save]: Adjust the screen brightness to reduce power consumption.
- [Expert], [Calibration]: Allow an expert, or anyone who loves picture quality, to manually tune to the best picture quality.
- [Hospital]: An image setting mode optimized for medical images.

For some LED models, select an image mode as follows:

- [Shopping Mall], [Airport & Station], [Office & School], [Control Room]: Displays the mode optimized for the installing environment.
- [Calibration]: Allow an expert, or anyone who loves picture quality, to manually tune to the best picture quality.

NOTE

- The type of [Select Mode] you can select may vary depending on the model or input signal.
- [Expert] is an option that allows a picture quality expert to fine-tune the picture quality using a specific image. Thus, it may not be effective for a normal picture.

[HDR]

This feature enables you to choose the optimal picture mode for your installation environment.

- [Mall/QSR]: Sharpens the image by increasing the contrast, brightness and sharpness.
- [General]: In a normal viewing environment, it opens a screen that can properly show the expressiveness and brightness of HDR.
- [Gov./Corp.]: The screen appears brighter and clearer than of the General screen.
- [Education]: Suitable picture for education.

For some LED models, select an image mode as follows:

- [Shopping Mall], [Airport & Station], [Office & School], [Control Room]: Displays the mode optimized for the installing environment.

[Brightness Settings]

SETTINGS / ⚙ → [Display] → [Picture User Settings] → [Brightness Settings]

You can adjust the brightness of the entire screen.

[Panel Brightness] (LED Light)

Controls the level of screen brightness by adjusting the backlight. The closer to 100 the brighter.

- Decrease the [Panel Brightness] (LED Light) to reduce energy consumption.
- Depending on the [Energy Saving] ([Auto]/[Maximum]), you may not be able to adjust the Panel Brightness.
  In this case, navigate to **SETTINGS /** ⚙ → [Display] → [Advanced Settings] → [Energy Saving] → [Brightness Control] and set to [Off] or [Minimum].
- Depending on your model, you might not have the [Panel Brightness] (LED Light) setting.

[OLED Pixel Brightness]

Adjusts the display brightness by varying the brightness of the OLED panel.

- Depending on the [Energy Saving] ([Auto]/[Maximum]), you may not be able to adjust the [OLED Pixel Brightness].
  In this case, navigate to **SETTINGS /** ⚙ → [Display] → [Advanced Settings] → [Energy Saving] → [Brightness Control] and set to [Off] or [Minimum].
- Depending on your model, you might not have the [OLED Pixel Brightness] setting.

[Contrast]

Adjusts the contrast of the bright and dark areas of the picture. The closer to 100, the higher the contrast will be.

[Brightness]

Adjusts the brightness of dark areas of the screen. The closer it is to 100, the lighter the screen becomes.

[Dynamic Contrast]

Corrects the difference between the bright and dark areas of the screen for optimal results depending on the brightness of the picture.

[Gamma]

Adjusts the medium brightness of the picture.

- BT.1886 expresses the gradation in ITU-R BT.1886, which is an international standard.

[Black Level]

Adjusts the darkness of the screen in order to display a perfect black. Select [Black Level] to match the color range of the external input device.

- This feature can be used while watching content through an external input.

[LED Local Dimming]

Maximizes the contrast ratio by making the bright areas of the screen brighter and the dark areas of the screen darker.

- [Off]: Disables the [LED Local Dimming] function.
- [Low]/[Medium]/[High]: Changes the contrast ratio.
- Turning this option [Off] may increase energy consumption.
- Depending on your model, it might not have this settings

[Motion Eye Care]

Automatically adjusts brightness and reduces image blur based on image data which reduces eyestrain.

- Turning this option [Off] may increase energy consumption.
- Depending on your model, it might not have this settings

NOTE

- Depending upon the input signal or the selected picture mode, the available options may differ.
- The configurable items differ depending upon model.

[Color Settings]

SETTINGS / ⚙ → [Display] → [Picture User Settings] → [Color Settings]

[Color]

Tones down or up the colors displayed on the screen. The closer to 100 the deeper the color.

[Tint]

Adjusts the color balance between red and green displayed on the screen. The closer to Red 50, the redder the color will be. The closer to Green 50, the greener the color will be.

[Color Gamut]

Selects the range of Colors to display.

- [Extended]: It expands the [Color Gamut] to match the scene.
- [Auto Detect]: It automatically sets the [Color Gamut] to match the signal.

[Fine Tune]

This is used when experts control it by using a test pattern. You can control it by selecting areas of six colors ([Red]/[Green]/[Blue]/[Cyan]/[Magenta]/[Yellow]). For normal images, adjustments may not result in noticeable Color changes.

- [Color Adjustment]: To make the image more colorful and lively adjust the Color and saturation of the picture.
- [Select Color]: From [Red]/[Green]/[Blue]/[Cyan]/[Magenta]/[Yellow], select a tone to adjust.
- [Adjust Saturation]/[Adjust Tint]/[Adjust Luminance]: Adjust the chroma/tint/luminance of the tone in the range of -30 to +30.

[White Balance]

The function to adjust each color to be reproduced more accurately based on white allows you to adjust the overall color tone of the screen to your preference.

- [Color Temperature]: You can set the color to make the display look cooler or warmer.
- [Method]: This method is used for fine-tuning the color temperature setting. You can control the color temperature at two points of the bright part and dark part of the video if you select [2 Points], at each point of 10 levels if you select [10 Points Signal Level(%)], and at each point of 22 levels of the video if you select [22 Points Signal Level(%)].
- [Point]: Select screen brightness for color temperature adjustment. If [Method] is set to [2 Points]; use Low to select shadows and High to select highlights.
  If [Method] is set to [10 Points Signal Level(%)]; you can select brightness using numbers indicating 10 levels.
  When the [Method] is set to [22 Points Signal Level(%)], you can select the brightness with the 22 levels of brightness.
- [Signal Level(%)]: Select screen brightness for color temperature adjustment.
  If [Method] is set to [10 Points Signal Level(%)]; you can select brightness using numbers indicating 10 levels.
  When the [Method] is set to [22 Points Signal Level(%)], you can select the brightness with the 22 levels of brightness.
- [Show brightness level at the maximum signal level(%)]: Adjusts the luminance of the highest 100% signal level.
- [Adjust brightness level at the selected signal level(%)]: The brightness of the selected signal level can be adjusted.
  - You can do these settings only when the [Method] is set to [10 Points Signal Level(%)] or [22 Points Signal Level(%)].
- [Red]/[Green]/[Blue]: Adjust the color temperature of the selected point.
  Adjust the intensity of [Red]/[Green]/[Blue] in the range of -50 to 50.
  You can adjust respective values for the brightness selected in [Point].

NOTE

- Depending upon the input signal or the selected picture mode, the available options may differ.
- The configurable items differ depending upon model.

[Clarity Settings]

SETTINGS / ⚙ → [Display] → [Picture User Settings] → [Clarity Settings]

You can adjust the contrast of a Picture to show it more clearly.

[Sharpness]

Adjusts the sharpness of the image. The closer to 50, the sharper and clearer the image will be.

[Super Resolution]

Sharpen the areas of the screen that are blurry or barely distinguishable.

[Noise Reduction]

Removes small dots that stand out so as to make the image clean.

[MPEG Noise Reduction]

Reduces the noise produced during the creation of digital video signals.

[Smooth Gradation]

It reduces the phenomenon that the outline of the image is rugged and in a staircase pattern and displays a smoother screen.

[Real Cinema]

Optimize display for movies.

[TruMotion]

Suitable the image quality of fast-moving pictures.

- [Off]: Turns off the [TruMotion].
- [Cinematic Movement]: Adjusts the shaking of the motion on the screen to make it feel like you are in a movie theater.
- [Natural]: Sets images with a lot of motions to look natural and clear.
- [Smooth Movement]: Softens fast-moving pictures.
- [User Selection]: Sets [TruMotion] manually.
  - [De-Judder]: Adjusts juddering on the screen.
  - [De-Blur]: Reduces the blurring effects of motion.
  - [OLED Motion]/[OLED Motion Pro]/[Motion Pro]/[NanoCell Motion Pro]: You can make your video clearer by eliminating afterimages.
- The advanced settings can be changed only in [User Selection] mode.

NOTE

- Depending upon the input signal or the selected picture mode, the available options may differ.
- The configurable items differ depending upon model.

[Select Content Type]

- You can set the Normal or Video label for each external input.

[Aspect Ratio]

SETTINGS / ⚙ → [Display] → [Aspect Ratio]

This feature enables you to change the picture size to view the picture at its optimal resolution.

- [Full]: Stretch the picture to fill the screen.
- [Original]: Display the picture at its original resolution.

[Rotation]

SETTINGS / ⚙ → [Display] → [Rotation]

[Screen Rotation]

- When turning the product on for the first time, the screen automatically rotates once depending on the installation environment. (You can check the information on the rotation status in the Rotate Screen menu.)
- This feature rotates the screen clockwise.
- You can set this feature to Off/90°/180°/270°.
- When set to off, this feature is deactivated.
- It is recommended that you use content designed to be used in Portrait mode.
- When the screen rotation is enabled, the PIP mode of the multi-screen is unavailable.

NOTE

- Depending on the model, the automatic screen rotation feature may not be supported.

[External Input Rotation]

- This feature rotates the screen clockwise.
- You can set this feature to Off/90°/180°/270°.
- Setting External Input Rotation to On (90° or 270°) resizes the video to be [Full Wide] for the ARC.
- If [External Input Rotation] is enabled during WiDi operation, the position of the mouse cursor may not be displayed accurately.
- Please note that the degradation of picture quality that occurs when you have enabled [External Input Rotation] during the use of external input has nothing to do with the product itself.
- If External Input Rotation is enabled on models that support touch, touch may not work properly.

[Mirror mode]

- Set the screen to rotate 180 degrees.

[Advanced Setting]

SETTINGS / ⚙ → [Display] → [Advanced Setting]

[Ultra HD Deep Color]

If you connect an HDMI, DP, or OPS device to one of the Deep Color adjustable ports, you can select between Ultra HD Deep Color On (6G) or Off (3G) in the Ultra HD Deep Color settings menu.

If a compatibility issue occurs with a graphics card when the Deep Color option is set to On at 3840 x 2160 @ 60 Hz, set the Deep Color option back to Off.

- HDMI, DP, and OPS specifications may vary depending on the input port. Check the specifications of each device before connecting.
- HDMI input port 1, 2 is best suited for high definition videos that are 4K@60 Hz (4:4:4, 4:2:2). However, video or audio may not be supported depending on the specifications of the external device. If this is the case, please connect the device to a different HDMI port.
- This feature may not be available on some models.

[OLED Panel Care]

- [Pixel Cleaning]: Prevent the screen from occurring problem while watching the same channel for a long period of time.

[Average Picture Level Auto Control]

Can use image quality control based on APL (Average Picture Level) of the monitor input image. When using the monitor as a Video Wall, it is recommended to set this function off to prevent an image quality difference between the monitors.

[Energy Saving]

- [Smart Energy Saving]: Automatically adjust the brightness of the screen according to the brightness of the picture to save energy.
  - [On]: Enable the Smart Energy Saving feature.
  - [Off]: Disable the Smart Energy Saving feature.
- [Brightness Control]: Adjust the brightness of the screen to save energy.
  - [Auto]: Automatically adjust the brightness of the screen according to ambient light.
  - [Off]: Disable energy saving.
  - Minimum/Medium/Maximum: Use energy saving according to the energy saving level set for the monitor.
- [Brightness Scheduling]: Adjust the backlight at specified times.
  - You can set this feature to [On/Off].
  - Add schedule by setting the schedule time and backlight / all red light value.
  - If the current time has not been set, [Brightness Scheduling] is disabled.
  - You can add up to six schedules, and they are sorted in ascending order by time.
  - You can edit a schedule by selecting it from the list and pressing the [OK] button.
  - You can delete all schedules by pressing the [DELETE ALL] button.

NOTE

- Return to default settings by clicking [Admin] > [Factory Reset].

[HDMI IT Content]

Set the HDMI IT Contents function.

- [Off]: Disable the HDMI IT Contents function.
- [On]: Enable the HDMI IT Contents function.
  This feature automatically changes the monitor's picture mode based on HDMI Contents information when an HDMI signal is entered.
  Even if the monitor's picture mode has been changed by the HDMI IT Contents feature, you can change the picture mode again manually.
  As this has a higher priority than the picture mode set by the user, the existing picture mode may be changed when the HDMI signal changes.

NOTE

- Return to default settings by clicking [Admin] > [Factory Reset].

Sound

[Select Mode]

SETTINGS / ⚙ → [Sound] → [Select Mode]

[Select Mode]

You can select the most suitable sound mode for each genre.

- [AI Sound Pro]: Depending on the content you watch, you can enjoy the optimized sound and virtual surround in real time.
- [Standard]: Optimizes the sound for all types of content.
- [Cinema]: Optimizes the sound for cinemas.
- [Clear Voice Pro]: Boosts voice clarity.
- [Sports]: Optimizes the sound for sports games.
- [Music]: Optimizes the sound for music.
- [Game Optimizer]: Optimizes the sound for gameplay.

[Use Main Speaker]

SETTINGS / ⚙ → [Sound] → [Sound Out] → [Use Main Speaker]

You can output sound through the main speaker.

- [Use Speaker Sound]: Enables you to turn the speaker on and off.

[Use Wired Speaker]

SETTINGS / ⚙ → [Sound] → [Sound Out] → [Use Wired Speaker]

[Optical Out Device]

Connect audio devices that support optical digital to the optical digital audio output port to enjoy richer sound more conveniently from your Signage.

- Applied only to models with an optical digital port.
- You can adjust the volume using the Signage remote control on some devices.

[HDMI(ARC) Device]

Outputs the sound of Signage through external audio devices connected to the HDMI (ARC) port.

- This option is activated when SIMPLINK has been set to [On].

[Use External Speakers with Main Speaker]

SETTINGS / ⚙ → [Sound] → [Sound Out] → [Use External Speakers with Main Speaker]

[Bluetooth Device + Main Speaker]

Both the internal speaker of the Main and the Bluetooth speaker can be used to output the sound at the same time or a surround sound can be used.

[Optical Out Device + Main Speaker]

Audio is played through the Signage's built-in speakers and the audio device connected to the digital optical audio output port simultaneously.

[Use No Speaker]

SETTINGS / ⚙ → [Sound] → [Sound Out] → [Use No Speaker]

Does not support the main speaker.

NOTE

- Some recently connected devices may automatically attempt to reconnect to the Signage monitor when it is turned on.
- It is recommended that you set LG audio devices that support LG Sound Sync to LG TV mode or LG Sound Sync mode before connecting.
- Press [Device Selection] to view the devices that are or that can be connected and connect other devices.
- You can use the signage remote control to adjust the volume of the connected device.
- If the audio device fails to connect, check that it is switched on and available for connection.
- Depending on the model, the [Main Speaker] or [Use No Speaker] function may not be supported.
- Depending on the type of the Bluetooth device, the device may not connect correctly or an abnormal behavior may occur such as unsynchronized video and audio.
- Sound may stutter or sound quality may be reduced if:
  - The Bluetooth device is too far from the Signage monitor.
  - There is an obstructing object between the Bluetooth device and the Signage monitor.
  - The Bluetooth device is used together with radio equipment such as a microwave oven or wireless LAN.

[Advanced Settings]

[Balance]

SETTINGS / ⚙ → [Sound] → [Advanced Settings] → [Balance]

You can adjust the volume of the left and right speakers.

- This setting is only available for Main Speaker.

[Equalizer]

SETTINGS / ⚙ → [Sound] → [Advanced Settings] → [Equalizer]

You can adjust the sound by increasing or decreasing the output of the specific frequency range of the voice signal.

- This option can be enabled if [Sound] → [Select Mode] is set to [Standard].

[Reset]

SETTINGS / ⚙ → [Sound] → [Advanced Settings] → [Reset]

Restores the detailed effect settings for the [Standard] sound mode to the initial settings.

[LG Sound Sync]

SETTINGS / ⚙ → [Sound] → [Advanced Settings] → [LG Sound Sync]

Connect LG Sound Sync devices to the optical digital input port and set [Sound Out] to [Optical Out Device].

If you set this function to [On], you can adjust the volume of the connected LG Sound Sync device with the Signage remote control.

- If the auto power function of a soundbar supporting LG Sound Sync is set to On, the power of the soundbar turns on or off together with the Signage power.

[Match Screen and Sound]

SETTINGS / ⚙ → [Sound] → [Advanced Settings] → [Match Screen and Sound]

You can sync the currently output sound of the speaker. The closer the value is set to 60, the slower the voice output speed will be than the default speed.

Select [Bypass] to output the sound from external devices without any audio delay. Audio may be outputted earlier than video due to the processing time for video that is inputted into the Signage.

- The adjustment options vary depending on the [Sound Out].

[Digital Sound Output]

SETTINGS / ⚙ → [Sound] → [Advanced Settings] → [Digital Sound Output]

Allows you to change settings for [Digital Sound Output].

- **SETTINGS / ⚙** → [Sound] → [Sound Out] → You can set the settings when [Use Wired Speaker] is [Optical Out Device] / [HDMI(ARC) Device].
- When operating [Pass Through], sound effects may not be output.
- The codec output with the equipment may vary from the input signal.

[PCM]	All	PCM
[Auto] / [Pass Through]	MPEG	PCM
	Dolby Digital	(Optical / HDMI ARC) Dolby Digital
	Dolby Digital Plus / Atmos	(Optical) Dolby Digital (HDMI ARC) Dolby Digital / Dolby Digital Plus / Atmos
	Dolby TrueHD (HDMI model only)	(Optical) Dolby Digital (HDMI ARC) Dolby Digital / Dolby Digital Plus / Atmos
	HE-AAC / AAC	(Optical) Dolby Digital (HDMI ARC) Dolby Digital / Dolby Digital Plus
	DTS / DTS Express / DTSHD MA	(Optical / HDMI ARC) DTS
	DTS-HD	(Optical / HDMI ARC) DTS
	DTS:X	(Optical / HDMI ARC) DTS

- Dolby TrueHD, Dolby Atmos : Some models may not be supported.

[Audio Out]

SETTINGS / ⚙ → [Sound] → [Advanced Settings] → [Audio Out]

- [Off]: Disables the use of [Audio Out]. (No audio outputted.)
- [Variable]: You can specify an output range for the external audio device connected to the monitor and adjust the volume within the range. You can change the volume of an external audio device within the range of 0 to 100 (the same as the Signage speaker volume). However, there may be a difference in the actual volume level outputted.
- [Fixed]: Sets a fixed audio output level for the external audio device.
  - If there is no external input, no external audio is outputted.
  - The variable audio output level 100 is the same as the fixed audio output level.

Admin

[Lock Mode]

SETTINGS / ⚙ → [Admin] → [Lock Mode]

[Home Dashboard Lock]

When you set the Home Dashboard Lock, you can limit the change in the settings of the Home Dashboard.

[USB Lock]

This feature enables you to configure the USB lock feature so that settings or content cannot be changed.

[OSD Lock]

This feature enables you to configure the OSD lock feature so that settings or content cannot be changed.

- Press and hold the Settings key for at least 10 seconds and enter password to access the settings menu in OSD Lock.

[IR Operation Lock]

- If you set this feature to [Off (Normal)], you can use your remote control.
- If you set this feature to [On (Power Key Only)], you can only use the power key.
- If you set this feature to [On (Block All)], you cannot use your remote control. (However, Power On feature is available.)
- Press and hold the Settings key for at least 10 seconds and enter password to access the settings menu in IR Operation Lock.

[Wi-Fi Lock]

This feature enables you to turn the Wi-Fi feature on or off.

[Wired Connection Lock]

This feature enables you to turn the Wired network connection on or off.

[Screen Share Lock]

- [On]: This feature enables you to turn the Screen Share feature off.
- [Off]: This feature enables you to turn the Screen Share feature on.
- [Off (PIN)]: This feature enables you to use the Screen Share feature using PIN number.

If the Screen Share Lock value is changed, the function is not applied without a reboot.

[Local Key Operation Lock]

This feature can restrict the operation of the Local Key(s).

- If you set this feature to [Off (Normal)], you can use the local keys on the monitor.
- If you set this feature to [On (Power Key Only)], you can only use the power key. (When you use a joystick, press and hold a local key to turn on/off the monitor.)
- If you set this feature to [On (Block All)], you cannot use the local keys. (However, Power On feature is available.)

[Change Password]

You can change the admin password.

1 Enter your current password.
2 Enter a new 6-digit password.
3 Enter the same password again in the Confirm Password field for confirmation.

[Software Update]

Use software updates to check and obtain the available version.

- Software Version: Display the version of the software.
- Auto Update: When it is set to On, updates are automatically made without a separate confirmation procedure.
- Update Detection Notification: Sets whether to Enable/Disable the update detection notification.
- CHECK FOR UPDATES: Manual checks for available updates in the server.

This feature is available only when network is connected.

[Enterprise Settings]

- Enter your company account code to apply the corresponding enterprise settings.
- When your code has been entered, the monitor set gets reset, thereby applying the corresponding enterprise settings.
- This feature does not get activated if a code has already been entered.

[Factory Reset]

Initializes all settings in [Setting] and files from the internal storage.

The exceptions are RGB gain value of [Calibration] mode, [Video Wall] ([Tile Mode], [Tile Mode Setting], [Natural Mode], [Frame Control], [Scan Inversion]) and [Server Setting] items of [Ez Setting], and [Set ID] items of [General].

NOTE

- It keeps the existing settings because the Off / On button in the User menu only affects the active / inactive status of the submenu.

CONTENT MANAGER

Web Login

- Different features are supported depending on the product.

This Signage product comes with a feature that enables you to access it on your PC or mobile device.

- Content Manager, Group Manager 2.0, Control Manager, Log Out, Change Password menus are provided.

- URL: https://set ip:3777
- You can check the initial password in **HOME /** → [MOBILE URL] menu.

⚠ CAUTION

- Supported resolutions (this program is optimized for the following resolutions):
  - PC: 1920 x 1080
  - Mobile: 360 x 640(1440 x 2560, 1080 x 1920), DPR
- Supported browsers (this program is optimized for the following browsers):
  - Chrome 85 or later (recommended)
- For security, please Login with the initial password and change the password.
- After the initial password has been changed, the password is not displayed in the **HOME /** → [MOBILE URL] menu.

Content Manager

[Player]

HOME / → (Player)

The Content Manager app's player feature enables you to play/manage contents of video, image, template, SuperSign and playlist in an integrated way. (The OLED models do not support the playback and management of image content and template content.)

[Continuous Play]

1. Select your desired type of content from the tab on the left and then select your desired content.
2. Click [Play] at the bottom of the screen and enjoy the content you have selected.

[Export]

1. Select your desired type of content from the tab on the left and click [Export] in the upper right-hand corner of the screen.
2. Select the content you wish to export.
3. Click [Copy]/[Move] at the bottom of the screen and select the device to which you wish to export the content. (If content already contained in the target device is selected during the [Move] operation, processing of that file will be skipped.)
4. You can see that the content has been moved/copied to the device.

[Delete]

1 Select your desired type of content from the tab on the left and click [Delete] in the upper right-hand corner of the screen.
2 Select the content you wish to delete.
3 Click [Delete] at the bottom of the screen.
4 You can see that the content has been deleted.

[Options]

1 Click [Options] in the upper right-hand corner of the screen.
2 1) Choose your desired sort criterion to sort content files either by file name or in the order they have been played (the most recently played file shown at the top of the list).
2) It is possible to only view the content stored on your desired device by filtering content files by device.

[Create Playlist]

When creating a playlist, *, /, “, :, ?, <, >, |, \, ., # cannot be used in the playlist file name. In addition, if the playlist contains content files whose names include such characters, you cannot move or copy the playlist.

1 Select the [Playlist] tap from the tab on the left and click [Create Playlist] in the upper right-hand of the screen.
2 Select the content you wish to add to the playlist and click [NEXT] at the bottom of the screen.
3 Set a play time for each piece of content (applicable only for photo and template content), as well as other items such as Conversion Effect, Ratio, and Auto Playback, and then click [DONE] button at the bottom of the screen.
4 You can see a new [Playlist] has been created.

[Distribute]

1 Click [Distribute] in the upper right-hand corner of the screen.
2 Go to the Group Manager app to distribute the created playlists.

NOTE

- The Distribute button shows only when playlist is selected as media type.

[Scheduler]

HOME / ⌂ → (Scheduler)

The Content Manager app's scheduler feature enables certain content to be played at a scheduled time through a playlist or external input.

Creating a Schedule

1 Click [New Schedule] in the upper of the screen.
2 Choose between [Playlist] and [Input Source].
3 1) If you have selected [Playlist], select the playlist you wish to schedule the playback of.
2) If you have selected [Input Source], select the external input source you wish to schedule the playback of.
4 Enter schedule information and create a new schedule. (When creating a schedule, *, /, ", :, ?, <, >, |, \, ., # cannot be used in the schedule file name. In addition, if the playlist linked to the schedule contains content files whose names include such characters, you cannot move or copy the playlist.)
5 Watch the playlist or external input you selected play back at its scheduled time.

Importing a Schedule

1 Click [Import] in the upper right-hand corner of the screen.
2 Select the external storage device from which you wish to import a schedule.
3 Select the schedule you wish to import to your monitor. (You can only choose a single schedule.)
4 Click [Done] at the bottom of the screen.
5 Check that the schedule has been imported to the monitor's internal storage memory.

Exporting a Schedule

1 Click [Export] in the upper right-hand corner of the screen.
2 Select the external storage device to which you wish to export a schedule.
3 Select the schedule you wish to export from your monitor. (You can choose multiple schedules.)
4 Click [Done] at the bottom of the screen.
5 Check that the schedule has been exported to the external storage device you selected.

[Delete Schedule]

1 Click [DELETE] in the upper right-hand corner of the screen.
2 Select the schedules you wish to delete.
3 Click [DELETE].
4 Check that the schedules have been deleted.

[Calendar View]

1 When you have registered schedules, click [Calendar View].
2 You can see that the schedules registered are displayed in the form of a timetable.

[Distribute]

1 Click [Distribute] in the upper right-hand corner of the screen.
2 Go to the Group Manager app to distribute the created schedules.

NOTE

- If the schedule creation time overlaps, the previously created schedule is deleted.
- Schedule does not work while Scheduling list app is running.

[Editor]

HOME / ⌂ → (Editor)

The Content Manager app's editor feature enables you to add your desired templates.

1 Select the template of your desired format. (You can choose between Landscape mode and Portrait mode.)
2 Modify the template's text.
  2-1. Apply your desired font style (Size, Weight, Underline, Italic)
3 Modify the media file.
  3-1. Select and apply the rate you want.
4 Save the template by clicking [Save] in the top right-hand corner of the screen.
5 Check that the template you saved is shown in the template list.

Supported Photo & Video Files

NOTE

- Subtitles are not supported.
- The photo feature is not supported in OLED model.

Supported video codecs

Extension	Codec	
.asf, .wmv	Video	VC-1 Advanced Profile (except WMVA), VC-1 Simple and Main Profiles
	Audio	WMA Standard (except WMA v1/WMA Speech)
.avi	Video	Xvid(GMC is not supported), H.264/AVC, Motion Jpeg, MPEG-4
	Audio	MPEG-1 Layer I, II, MPEG-1 Layer III (MP3), Dolby Digital, LPCM, ADPCM
.mp4, .m4v, .mov	Video	H.264/AVC, MPEG-4, HEVC, AV1
	Audio	Dolby Digital, Dolby Digital Plus, AAC, MPEG-1 Layer III (MP3), Dolby AC-4
.3gp .3g2	Video	H.264/AVC, MPEG-4
	Audio	AAC, AMR-NB, AMR-WB
.mkv	Video	MPEG-2, MPEG-4, H.264/AVC, VP8, VP9, HEVC, AV1
	Audio	Dolby Digital, Dolby Digital Plus, AAC, PCM, MPEG-1 Layer I, II, MPEG-1 Layer III (MP3)
.ts, .trp, .tp, .mts	Video	H.264/AVC, MPEG-2, HEVC
	Audio	MPEG-1 Layer I, II, MPEG-1 Layer III (MP3), Dolby Digital, Dolby Digital Plus, AAC, PCM, Dolby AC-4
.mpg, .mpeg, .dat	Video	MPEG-1, MPEG-2
	Audio	MPEG-1 Layer I, II, MPEG-1 Layer III (MP3)
.vob	Video	MPEG-1, MPEG-2
	Audio	Dolby Digital, MPEG-1 Layer I, II, DVD-LPCM

- Dolby AC-4: Some models may not be supported.

Maximum transmit ratio	
FHD movie	H.264 1920 x 1080@60P BP/MP/HP@L4.2 40 Mbps HEVC 1920 x 1080@60P Main/Main10@L4.1 40 Mbps
UHD movie (ULTRA HD models only)	H.264 3840 x 2160@30P BP/MP/HP@L5.1 50 Mbps HEVC 3840 x 2160@60P Main/Main10@L5.1 60 Mbps
HFR Video (HFR models only)	HEVC 3840 x 2160@120P Main/Main10@L5.2 Max 60 Mbps
Dolby Vision Video (4K models: ULTRA HD models only that supports Dolby Vision)	HEVC 3840 x 2160@60P Main/Main10@L5.1 Max 50 Mbps
Dolby Vision Video (8K models: Dolby Vision Support model only)	HEVC 7680 x 4320@60P Main/Main10@L6.1 Max 100 Mbps (8K models only)
8K Video (8K models only)	AV1 7680 x 4320@60p Max 50 Mbps HEVC 7680 x 4320@60p Main/Main10@L6.1 Max 100 Mbps

Supported Photo File Formats

File type	Format	Resolution
.jpeg, .jpg, .jpe	**JPEG**	• Minimum: 64 x 64 • Maximum: - Normal Type: 15360 (W) x 8640 (H) - Progressive Type: 4800 (W) x 3600 (H)
.png	**PNG**	• Minimum: 64 x 64 • Maximum: 5760 (W) x 5760 (H)
.bmp	**BMP**	• Minimum: 64 x 64 • Maximum: 1920 (W) x 1080 (H)
.heif, .heic	**HEIF**	• Minimum: 64 x 64 • Maximum: 4800 (W) x 3600 (H), 9600 (W) x 7200 (H) (8K models only)
.avif	**AVIF**	• Minimum: 64 x 64 • Maximum: 4800 (W) x 3600 (H), 9600 (W) x 7200 (H) (8K models only)

- HEIF/HEIC formats do not support transition effects and screen rotation.

Cautions for Video Playback

- Streams that include Global Motion Compensation (GMC) and Quarterpel Motion Estimation (Qpel) are not supported.
- ULTRA HD video (ULTRA HD models only): 3840 x 2160, 4096 x 2160
- Some HEVC-encoded ULTRA HD videos other than the content officially provided by LG Electronics may not be played.
- Some codecs can be supported after a software upgrade.

Extension	Codec	
.mkv, .mp4, .ts	**Video**	H.264/AVC, HEVC
	Audio	Dolby Digital, Dolby Digital Plus, AAC

- Only Window Media Audio V7 and later are supported.
- The AAC Main Profile is not supported.
- Video files created by some encoders may not be played.
- Video files in a different format than specified may not be played properly.
- Video files stored on a USB storage device that does not support High Speed may not be played properly.
- Videos with unsupported audio only play video or do not play.
- HFR video files do not support transition effects and screen rotation.
- 8K video files do not support transition effects and screen rotation. (8K Support Model only)

Tips for using USB storage devices

- Only USB storage devices are recognized.
- USB storage devices connected to the monitor through a USB hub may not work properly.
- It is recommended that you use a USB hub or USB storage device with a power supply.
- USB storage devices that use an automatic recognition program may not be recognized.
- USB storage devices that use their own drivers may not be recognized.
- The recognition speed of a USB storage device may depend on each device.
- Please do not turn off the display or unplug the USB device when the connected USB storage device is working. When the device is suddenly separated or unplugged, the stored files or the USB storage device may be damaged.
- Please do not connect the USB storage device which was artificially maneuvered on the PC. The device may cause the product to malfunction or fail to be played. Remember to only use USB storage devices that store normal music, image, and/or movie files.
- Storage devices formatted with utility programs that are not supported by Windows may not be recognized.
- Please connect power to a USB storage device (over 0.5 A) which requires an external power supply. Otherwise, the device may not be recognized.
- Please connect a USB storage device with the cable offered by the device maker.
- Some USB storage devices may not be supported or operated smoothly.
- File alignment methods of the USB storage device is similar to Windows and filenames can include up to 100 English characters.
- Be sure to back up important files since data stored in a USB memory device may be damaged. We will not be responsible for any data loss.
- It is recommended that you use an external USB HDD with a rated voltage of 5 V or less and a rated current of 500 mA or less. If you use a device requiring a higher voltage/current than the rated voltage/current, it may not operate properly due to lack of current.
- Please use only USB storage devices formatted with the FAT32, exFAT or NTFS file system provided by Windows.
- It is recommended to use storage devices with capacities up to 32 GB for USB memory and up to 2 TB for USB hard drives.
- Any device with more than the recommended capacity may not work properly.
- Using a USB extension cable may cause operational issues or prevent proper function.
- If a USB hard drive with a power-saving feature does not function properly, turn the drive off and on to restore normal operation. For more details, refer to the user manual of the USB hard drive.
- Press the (INPUT) button on the remote control. Focus on the USB storage device you wish to remove, then press the (EJECT) button that appears to the right to remove it. Removing the USB storage device without executing (EJECT) may cause errors on the device or storage device.
- USB storage devices supported by mobile devices may not be recognised.

- Even if a USB storage device has multiple partitions, their usage may be partially limited.
- If a USB storage device is connected to a USB multi-card reader, its volume data may not be detected.
- If the USB storage device does not work properly, remove it and connect it again.
- USB storage devices (USB 2.0 or below) are also supported. However, they may not work properly in the videos list.
- A maximum of 999 folders or files can be recognized under one folder.
- When distributing contents to USB while playing a video in UHD resolution, the video might experience temporary stuttering.
- Even if multiple USB storage devices are connected, up to three USB storage devices can be used.
- When using SuperSign CMS, it is recommended to use only one USB storage device.

Group Manager 2.0

This feature enables you to group together multiple monitor sets on a single network into the same group and to distribute content (schedules and playlists) or copy setting data on a group basis. This feature has two modes, Master and Slave, and it can access the browser on your PC or mobile device.

[Master]

- Add, edit, and delete group.
- Clone your device's settings data.
- Distribute [Schedule] and [Playlist] on a group basis.
- All monitor sets initially come in Master mode.

[Slave]

- Play [Schedule] and [Playlist] distributed in Master mode.
- Remove monitor sets for their groups.
- Monitor sets that have been added to a group are automatically switched to Slave mode. Conversely, when a monitor set has been deleted from a group, it is automatically initialized and switched to Master mode.
- If a new Slave has been added to an existing group, or if the [Data Cloning] or the distribution of [Schedule]/[Playlist] has not been properly performed, the [Data Cloning] or [Sync] button will be activated.
- You can duplicate the master device's setting data to the group by using [Data Cloning].
- You can re-download the content distributed to the group by using [Sync].

[GROUP MANAGEMENT]

- Creating a New Group
  1. Click [Add New Group].
  2. Enter a group name.
  3. Click [Add Device], select the devices you wish to add to the group, and add them.
  4. Click [Done], and you will see that a new group has been created.
- Editing a Group
  1. Click the group you wish to edit.
  2. Add a new device by using [Add Device].
  3. Delete a device by using [Delete Device].
  4. Check whether the devices in the group are connected to a network by using [Device Check].
  5. If there are any sets of devices in the group that are not [Data Cloning] or content synchronized, [Data Cloning] or [Sync] button will be activated.
  6. You can re-copy the master device's setting data to the group by using [Data Cloning].
  7. You can re-distribute the content distributed to the group by using [Sync].
- Deleting a Group
  1. Click [Delete Group].
  2. Select the group you wish to delete and click [Delete].
  3. Check that the group you selected has been deleted.
- All Devices View: This page enables you to manage all slave monitor sets that are connected to the same network.
  1. Click [All Devices View].
  2. Click [Reset Device Mode].
  3. Select the slave monitor set whose device mode you wish to change and click [Reset].

[Setting Data Cloning]

1 Select your desired group and click Clone.
2 Check that the data have been copied on the slave sets.

[Content Distribute]

1 Select the type of content you wish to distribute (Schedules or Playlists).
2 Select the content you wish to distribute.
3 Select the group to which you wish to distribute the content and click [Distribute].
4 Run the Content Manager app on the slave sets and check that the content has been distributed.

How to Use

- Monitor: Run, add, delete or edit app on the home screen.
- Mobile: Mobile devices: Run the app in the Launcher bar or access the app from a mobile device using the QR code or URL provided.

⚠ CAUTION

- You can create up to 25 groups.
- You can add up to 12 slave devices to a group.
- You can distribute the schedules stored on external devices after executing Content Manager's import operation.
- Make sure to delete all schedules stored on the slave sets before distributing any schedules.
- A list of devices you can add to your desired group appears only when the following conditions have been met:
  - The devices you wish to add must be on the same network as the master device.
  - The devices you wish to add must be in Master mode, and they must not belong to any existing group.
  - Port 1900 (UDP) needs to be activated ([Setting] → [General] → [Network] → [Port Control]: Port 1900 (UDP) unregistered).
- It may not work properly in wireless network environments. It is recommended you use a wired network.
- Run the initial settings for Slave function when deleting the group.

Gallery Mode

This mode allows you to appreciate the natural environment and famous paintings.
HOME / ⌂ → Open the [Gallery Mode] app.

- You can click and play the representative theme image that appears in the middle of the screen, or click the theme preview image that appears at the bottom of the screen to play.
- You can also go to [MY THEMES] at the top right of the screen and set the order of the themes to play.
- Within the theme player, you can go to the theme selection list through [GO TO LIST] and turn on or off the background music through [THEME SOUND].
- A total of 5 themes ([Sunny Day], [Rainy Day], [Art Gallery], [Art Photos], and [Colorful Spring]) are available, and the supported images are as follows.

Screen Share

This feature allows the screen of a user's device such as a mobile or PC Windows to be shared with a display using a wireless connection such as WiDi or Miracast.

How to Use [Screen Share]

INPUT / → → [Screen Share]

1 Connect according to the instructions provided by the guide that can be accessed through the CONNECTION GUIDE button in the upper right.

2 Once the connection is established, Screen Share between the user device and the monitor is enabled.

NOTE

- For the information on how to use Intel WiDi, visit PC/laptop manufacturer webpage.
- This feature only works properly with WiDi 3.5 or later versions.
- This feature only works on Windows 8.1 or later.

LG Presenter

This feature uses the web browser on your PC to display the PC screen on the Signage monitor that is connected to your PC via cable or wireless.

How to use LG Presenter

On Signage

INPUT / → LG Presenter

On Signage

Enter the URL provided on the Signage into the address bar of your web browser.

NOTE

- This feature may not be supported depending on the product.
- Only PC screen sharing is supported. Audio sharing is not supported.
- Some web browsers do not support screen sharing. We recommend using the latest version of Chrome.
- When connecting via a web browser, a warning may appear indicating that the connection is unsafe. This is not a security issue, and you can proceed as usual.
- Since some UIs related to screen sharing are provided by the PC browser, the displayed language or the action may be different.
- The handover feature is used to share another client's screen when one client is already connected. It requests the currently connected client to hand over the screen sharing privilege.
- The handover request notification appears only if the user has allowed notifications.

CAUTION

- The Signage and PC must be on a network where they can be connected to each other.
- If Screen Share does not work or if a normal connection cannot be made to the Signage device, check the firewall settings on your PC.
- LG Presenter does not support video playback.

MANAGEMENT TOOLS

Control Manager

Control and check the status of the display through the Web browser.
This function is available for PCs and mobile devices.
Different features are supported depending on the product.

Function

- [Dashboard]: Display a summary of the product's status and provides links to each page.
- [Display & sound]: Provides features such as Screen Brightness, Sound, Input, and Reboot.
- [Time & Date]: Enable/disable Set Automatically feature and displays/changes the time set for the product.
- [Network]: Set the name and IP address of your Signage monitor.
- [Tile Mode]: Display the tile mode settings of the product.
- [Fail Over]: Turns the Fail Over feature on or off and sets related items.
- [Play via URL]: Turn Play via URL on or off and set URLs.
- [S/W Update]: Update the firmware of the product.
- [Charts]: Output the product's status information such as its temperature and fan status.
- [Log]: Output product malfunction records.
- [System Information]: Output information such as the product's software version and model name.

Picture ID

[Picture ID] is used to change the settings of a specific set (monitor) using a single IR receiver for multi-vision. Communication is possible between a monitor with an IR receiver and other monitors using RS-232C cables. Each monitor is identified by a Set ID. Setting [Picture ID] allows you to only use the remote control with monitors with a [Set ID] that matches the [Picture ID].

1 Assign [Set ID] to the installed monitors as shown below:

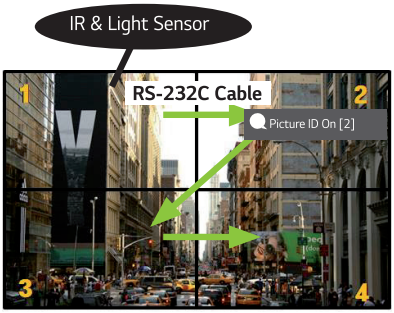

2 Press the red [Picture ID] [On] button on the remote control.

3 Make sure that the Picture ID you set is identical to the [Set ID] of the monitory you wish to control.

- A set with a [Set ID] that is different from the [Picture ID] cannot be controlled by IR signals.

NOTE

- If [Picture ID] has been set to 2, only the upper right monitor, which has a [Set ID] of 2, can be controlled by IR signals.
- If you press the green [Picture ID] [Off] button on your remote control, the [Picture ID] for all monitors are turned off. If you then press any button on the remote control, all monitors can be controlled by IR signals regardless of their [Set ID]'s.

TO CONTROL AN EXTERNAL PC USING TOUCH SCREEN

- This only applies to certain models.

Connecting to a PC

Connecting this product to a PC with a USB cable (Type A to Type B) allows you to control the connected PC by touching the screen of the product.

For a PC that supports USB-C, use a USB-C cable to connect this product to the PC and control the PC using the touch screen.

If your product is equipped with OPS, you can also control the OPS by touching the screen of the product.

Prioritized Tasks on the Touch Screen

Priority	States	Operation Conditions	Device performing the task when the screen is touched
1	• External input rotation set to 90˚/180˚/270˚ • Menu, App, dashboard, etc. displayed • Pop-up message displayed	Only one of the states is shown	Screen of the product
2	• Equipped with OPS • External input configured for OPS	All states are shown	OPS
3	• Connected to a PC with a USB-C cable • External input configured for USB-C	All states are shown	PC connected with USB-C
4	• External input configured (except for OPS/USB-C) • PC connected to the front of the product with a touch cable	All states are shown	PC connected to the front of the product with a touch cable
5	• External input configured (except for OPS/USB-C) • PC connected to the rear of the product with a touch cable	All states are shown	PC connected to the rear of the product with a touch cable

NOTE

- When connecting to an external PC and using it with a touch screen, it may take a while to recognize your touch on the touch screen device upon switching the connection for the touch function between external PCs.

IR CODE

- All models do not support the HDMI/USB function.
- Some key codes may not be supported depending on the model.

Code (Hex)	Function	Remarks
08	⏻ (POWER)	Remote control button
C4	MONITOR ON	Remote control button
C5	MONITOR OFF	Remote control button
95	**ENERGY SAVING**	Remote control button
0B	INPUT (Select input)	Remote control button
10	Number Key 0	Remote control button
11	Number Key 1	Remote control button
12	Number Key 2	Remote control button
13	Number Key 3	Remote control button
14	Number Key 4	Remote control button
15	Number Key 5	Remote control button
16	Number Key 6	Remote control button
17	Number Key 7	Remote control button
18	Number Key 8	Remote control button
19	Number Key 9	Remote control button
02	(Vol +)	Remote control button
03	(Vol -)	Remote control button
E0	Brightness (Page Up)	Remote control button
E1	Brightness (Page Down)	Remote control button
DC	3D (3D)	Remote control button
32	1/a/A	Remote control button
2F	CLEAR	Remote control button
7E	SIMPLINK	Remote control button
79	ARC (Mark/Aspect Ratio)	Remote control button
4D	PSM (Picture Mode)	Remote control button
09	(MUTE)	Remote control button

Code (Hex)	Function	Remarks
43	(SETTINGS/MENU)	Remote control button
99	Auto Configuration	Remote control button
40	(Up)	Remote control button
41	(Down)	Remote control button
06	(Right)	Remote control button
07	(Left)	Remote control button
44	(OK)	Remote control button
28	(BACK)	Remote control button
7B	Tile	Remote control button
5B	Exit	Remote control button
72	Picture ID On (Red)	Remote control button
71	Picture ID Off (Green)	Remote control button
63	Yellow	Remote control button
61	Blue	Remote control button
5F	W.BAL	Remote control button
3F	(S.MENU)	Remote control button
7C	(HOME)	Remote control button
97	Swap	Remote control button
96	Mirror	Remote control button

CONTROLLING MULTIPLE PRODUCTS

- This only applies to certain models.

Use this method to connect several products to a single PC. You can control several products at a time by connecting them to a single PC.

In the Option menu, the Set ID must be between 1 and 1000 without being duplicated.

Connecting cables

- Images may differ according to the model.

Connect the RS-232C cable as shown in the picture.

The RS-232C protocol is used for communication between the PC and product. You can turn the product on/off, select an input source and adjust the OSD menu from your PC.

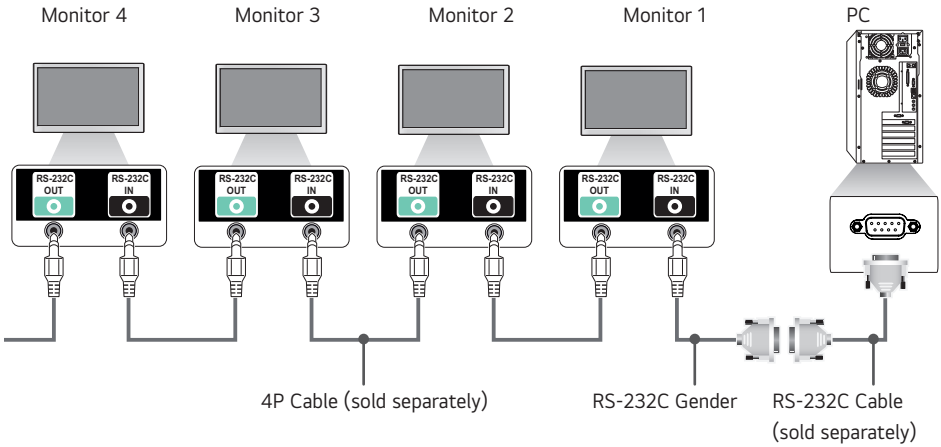

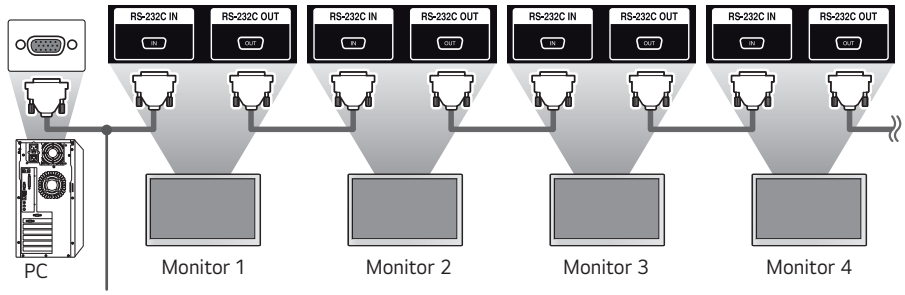

Communication Parameter

Baud Rate: 9600 BPS
Data Length: 8 bits
Parity Bit: None
Stop Bit: 1 bit
Flow Control: None
Communication Code: ASCII

NOTE

- When using 3-wire connections (non-standard), an IR daisy chain cannot be used.
- Be sure to only use the provided gender to connect properly.
- When you have daisy-chained multiple Signage products to control them simultaneously, if you attempt to turn on/off the master device in a continuous manner, some products may not turn on. In this case, you can turn those monitors on by pressing the **MONITOR ON** button, not the Power button.

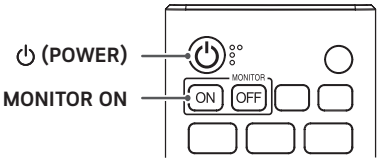

Command Reference List

		Command		Data (Hexadecimal)
		1	2	
01	[Power]	k	a	00 to 02
02	Select Input	x	b	See Select Input
03	[Aspect Ratio]	k	c	See [Aspect Ratio]
04	[Brightness Control]	j	q	00 to 05
05	[Select Mode]	d	x	See [Select Mode]
06	[Contrast]	k	g	00 to 64
07	[Brightness]	k	h	00 to 64
08	[Sharpness]	k	k	00 to 32
09	[Color]	k	i	00 to 64
10	[Tint]	k	j	00 to 64
11	[Color Temperature]	x	u	70 to D2
12	[Balance]	k	t	00 to 64
13	[Sound Mode]	d	y	See [Sound Mode]
14	[Mute on]	k	e	00 to 01
15	Volume Control	k	f	00 to 64
16	[Current Time] 1 (year/month/day)	f	a	See [Current Time] 1 (year/month/day)
17	[Current Time] 2 (hour/minute/second)	f	x	See [Current Time] 2 (hour/minute/second)
18	[No Signal Power Off (15 Min)]	f	g	00 to 01
19	[No IR Power Off (4 hour)]	m	n	00 to 01
20	[Language]	f	i	See [Language]
21	[Default] Settings	f	k	00 - 02
22	Current Temperature	d	n	FF
23	[Key]	m	c	See [Key]
24	Time Elapsed	d	l	FF
25	Product Serial Number Check	f	y	FF

		Command		Data (Hexadecimal)
		1	2	
26	[Software Version]	f	z	FF
27	[White Balance] Red Gain	j	m	00 to FE
28	[White Balance] Green Gain	j	n	00 to FE
29	[White Balance] Blue Gain	j	o	00 to FE
30	[White Balance] Red Offset	s	x	00 to 7F
31	[White Balance] Green Offset	s	y	00 to 7F
32	[White Balance] Blue Offset	s	z	00 to 7F
33	[Backlight]	m	g	00 to 64
34	[Screen Off]	k	d	00 to 01
35	[Tile Mode]	d	d	00 to FF
36	[Tile Mode] Check	d	z	FF
37	[Tile ID]	d	i	See [Tile ID]
38	[Natural Mode] (In Tile Mode)	d	j	00 to 01
39	[DPM (Standby Mode)]	f	j	See [DPM (Standby Mode)]
40	Remote Control/Local Key Operation Lock	k	m	00 to 01
41	[Power On Delay]	f	h	00 to FA
42	[Fail Over] Mode	m	i	00 to 02
43	[Fail Over] Input	m	j	See [Fail Over] Input
44	Remote Control Key Lock	t	p	00 to 02
45	[Local Key Operation Lock]	t	o	00 to 02
46	Status Check	s	v	See Status Check
47	[Daylight Saving Time]	s	d	See [Daylight Saving Time]
48	[PM Mode]	s	n, 0c	00 to 05
49	[ISM Method]	j	p	See [ISM Method]
50	[Network Setting]	s	n, 80(81)(82)	See [Network Setting]

		Command		Data (Hexadecimal)
		1	2	
51	[Power On Status]	t	r	00 to 02
52	Wired [Wake On LAN (Networked Standby Mode)]	f	w	00 to 01
53	[Screen Rotation]	t	h	00 to 03
54	[Time Sync]	s	n, 16	00 to 01
55	[Contents Sync]	t	g	00 to 01
56	[LAN Daisy Chain]	s	n, 84	00 to 01
57	[External Input Rotation]	s	n, 85	00 to 03
58	[Beacon]	s	n, 88	00 to 01
59	[Brightness Scheduling] Mode	s	m	00 to 01
60	[Brightness Scheduling]	s	s	See [Brightness Scheduling]
61	[Multi Screen] Mode & Input	x	c	See [Multi Screen] Mode & Input
62	[Aspect Ratio] (Multi Screen)	x	d	See [Aspect Ratio] (Multi Screen)
63	[Screen Off] (Multi Screen)	x	e	See [Screen Off] (Multi Screen)
64	[Screen Off Always]	s	n, 0d	00 to 01
65	Stop Video	k	x	00 to 01
66	Wireless [Wake On LAN (Networked Standby Mode)]	s	n, 90	00 to 01
67	[OSD Lock]	k	l	00 to 01
68	[HDMI IT Content]	s	n, 99	00 to 01
69	[Holiday Setting]	s	n, 9b	See [Holiday Setting]
70	[UPnP]	s	n, 9c	00 to 01
71	[Home Dashboard Lock]	s	n, 9d	00 to 01
72	[USB Lock]	s	n, 9e	00 to 01
73	[Wi-Fi Lock]	s	n, 9f	00 to 01
74	[Screen Share Lock]	s	n, a0	00 to 01

		Command		Data (Hexadecimal)
		1	2	
75	[Play Backup Content]	s	n, a1	See [Play Backup Content]
76	[Digital Audio Input]	s	n, a2	00 to 01
77	[Booting Logo Image]	s	n, a3	00 to 01
78	[SoftAP]	s	n, a4	00 to 01
79	[Natural Size]	s	n, a5	00 to 64
80	Play Saved Internal Media	s	n, a8	See Play Saved Internal Media
81	[No Signal Image]	s	n, a9	00 to 01
82	[Audio Out]	s	n, aa	00 to 02
83	[DPM (Standby Mode) Wake Up Control]	s	n, 0b	00 to 01
84	[Fan] Failure Check	d	w	FF
85	[Timer Power On] Scheduling	f	d	See [Timer Power On] Scheduling
86	[Timer Power Off] Scheduling	f	e	See [Timer Power Off] Scheduling
87	LCIN008 Control	s	n, b8	See LCIN008 Control
88	[Transfer Control]	s	n, cb	See [Transfer Control]
89	Multichannel	s	n, 76	01 to 09
90	Change SetID	j	x	See Change SetID
91	[Gamma]	s	n, ad	00 to 03
92	[Black Level]	s	n, ae	00 to 02
93	[Ultra HD Deep Color]	s	n, af	See [Ultra HD Deep Color]
94	[Sync Mode]	s	n, b0	00 to 01
95	[Input Manager]	s	n, b1	See [Input Manager]
96	[PC/OPS Power Control]	s	n, 8b	00 to 02
97	[LED Local Dimming]	s	n, c1	00 to 01
98	[Scan Inversion]	s	n, 87	00 to 01
99	[Frame Control]	s	n, b7	00 to 01

		Command		Data (Hexadecimal)
		1	2	
100	[Average Picture Level Auto Control]	s	n, be	00 to 01
101	Read Brightness Value	m	u	FF
102	[Screen Fault Detection]	t	z	00 to 01
103	[Stereo Mode]	s	n, c2	00 to 02
104	[HDR Picture Mode]	s	n, c4	See [HDR Picture Mode]
105	[Dynamic Tone Mapping]	s	n, c5	00 to 01
106	[LED Local Dimming]	s	n, c6	00 to 03
107	[USB2 to HDBaseT]	s	n, c3	00 to 01
108	[Change Password]	s	n, a7	See [Change Password]
109	[Brightness Range Adjustment]	s	n, ab	See [Brightness Range Adjustment]
110	[Color Calibration]	s	n, d6	00 to 01
111	[Quiet Mode]	s	n, c7	00 to 01
112	[Quick Start+]	s	n, 0e	00 to 01
113	Vectorscope On/Off	s	n, e7	00 to 01
114	Waveform On/Off	s	n, e8	00 to 01
115	False Color Mode	s	n, e9	00 to 02
116	False Color – Zebra	s	n, ea	00 to 64
117	False Color – Color	s	n, eb	00 to 64
118	SDR/HDR Signal Format	s	n, ec	00 to 02
119	HDR EOTF	s	n, ed	00 to 0e
120	Phase Shift	s	n, ee	0000 to 0168
121	Gen Lock	s	n, dc	00 to 01
122	[Ultra HD Deep Color]	s	n, af	See [Ultra HD Deep Color]
123	[Smart Brightness Control]	s	n, 55	00 to 03
124	Macro Preset	s	n, 8d	01 to 10
125	Douser Open/Close	s	n, 8e	00 to 01
126	Video Position	s	n, 8f	0000 to 01BC (4K) or 0000 to 00DE (2K)
127	[SI Server Setting]	s	n, ca	See [SI Server Setting]

* Note: Commands may not work when there is no external input used.

* Some commands may not be supported on some models.

Transmission/Reception Protocol

Transmission

(Command1)(Command2)( )(Set ID)( )(Data)(Cr)

* (Command1): This command is used to identify between the adjustment setting or the user adjustment modes.
* (Command2): This command is used to control the monitor.
* (Set ID): Used for selecting a set you want to control. A unique Set ID can be assigned to each set ranging from 1 to 1000 (01H to 3E8H) under Settings in the OSD menu. Selecting '00H' for Set ID allows the simultaneous control of all connected monitors. (The maximum value may differ depending on the model.)
* (Data): Transmits command data. Data count may increase depending on the command.
* (Cr): Carriage Return. This parameter corresponds to '0 x 0D' in ASCII code.
* ( ): White Space. This parameter corresponds to '0 x 20' in ASCII code.

Acknowledgment

(Command2)( )(Set ID)( )(OK/NG)(Data)(x)

* The product transmits an ACK (acknowledgment) based on this format when receiving normal data. At this point, if the data is FF, it indicates the present status data. If the data is in data write mode, it returns the data of the PC computer.
* If a command is sent with Set ID '00' (=0 x 00), the data is reflected to all monitors and they do not send an acknowledgment (ACK).
* If you send "FF" as the value of the data in control mode via RS-232C, you can check the value currently set for the relevant feature (not applicable to some features).
* Some commands may not be supported on some models.

01. [Power] (Command: k a)

Controls the power on/off status of the monitor.

Transmission
(k)(a)( )(Set ID)( )(Data)(Cr)

Data 00: [Off]
01: [On]
02: Restart

Acknowledgment
(a)( )(Set ID)( )(OK/NG)(Data)(x)

* The Acknowledgment signal is returned properly only when the monitor is fully powered on.
* There may be a delay between the Transmission and Acknowledgment signals.
* This feature may not be available for all models.

02. Select Input (Command: x b)

Selects an input signal.

Transmission
(x)(b)( )(Set ID)( )(Data)(Cr)

Data 20: AV
40: COMPONENT
60: RGB
70: DVI-D (Normal)
80: DVI-D (Video)
90: HDMI1 (Video)
A0: HDMI1 (Normal)
91: HDMI2 (Video)
A1: HDMI2 (Normal)
92: OPS/HDMI3/DVI-D (Video)
A2: OPS/HDMI3/DVI-D (Normal)
95: OPS/DVI-D (Video)
A5: OPS/DVI-D (Normal)
96: HDMI3/DVI-D (Video)
A6: HDMI3/DVI-D (Normal)
97: HDMI3/HDMI2/DVI-D (Video)
A7: HDMI3/HDMI2/DVI-D (Normal)
98: OPS (Video)
A8: OPS (Normal)
99: HDMI2/OPS (Video)
A9: HDMI2/OPS (Normal)
C0: DISPLAYPORT (Video)
D0: DISPLAYPORT (Normal)
C1: DISPLAYPORT/USB-C (Video)
D1: DISPLAYPORT/USB-C (Normal)
C2: HDMI3 (Video)
D2: HDMI3 (Normal)
C3: HDBaseT (Video)
D3: HDBaseT (Normal)
E0: SuperSign webOS Player
E1: Others
E2: Multi Screen
E3: Play via URL
E8: SI App
F0: SDI 1
F2: SDI 3
F3: SDI 4
F4: Dual Link (SDI 1&2)
F5: Dual Link (SDI 3&4)
F6: Qual Link: Auto
F7: Qual Link: 2SI
F8: Qual Link: Square
F9: SDI Quad View

Acknowledgment
(b)( )(Set ID)( )(OK/NG)(Data)(x)

* Some input signals may not be available for all models.
* If it is not distributed from SuperSign W, webOS Player returns NG.
* If it says "Read" from the IDB mode, it will respond as a Normal Label type.
* The SI App only supports Set operations over RS232C.

03. [Aspect Ratio] (Command: k c)

Adjusts the aspect ratio of your monitor.

Transmission
(k)(c)( )(Set ID)( )(Data)(Cr)

Data 02: [Full Screen]
06: [Original]

Acknowledgment
(c)( )(Set ID)( )(OK/NG)(Data)(x)

* The aspect ratio may differ depending on the model's input configuration.

04. [Brightness Control] (Command: j q)

Sets the brightness of your monitor.

Transmission
(j)(q)( )(Set ID)( )(Data)(Cr)

Data 00: [Off]
01: [Minimum]
02: [Medium]
03: [Maximum]
04: [Auto]
05: [Screen Off]

Acknowledgment
(q)( )(Set ID)( )(OK/NG)(Data)(x)

* This feature may not be available for all models.

05. [Select Mode] (Command: d x)
Selects a mode.

Transmission
(d)(x)( )(Set ID)( )(Data)(Cr)

Data 00: [Mall/QSR]
01: [General]
02: [Gov./Corp.]
03: [Transportation]
04: [Education]
05: [Expert]
08: [Auto Power Save]
11: [Calibration]
12: [Hospital]

Acknowledgment
(x)( )(Set ID)( )(OK/NG)(Data)(x)

* Some picture modes may not be available for all models.

06. [Contrast] (Command: k g)
Adjusts the screen contrast.

Transmission
(k)(g)( )(Set ID)( )(Data)(Cr)

Data 00-64: Contrast 0-100

Acknowledgment
(g)( )(Set ID)( )(OK/NG)(Data)(x)

07. [Brightness] (Command: k h)
Adjusts the screen brightness.

Transmission
(k)(h)( )(Set ID)( )(Data)(Cr)

Data 00-64: Brightness 0-100

Acknowledgment
(h)( )(Set ID)( )(OK/NG)(Data)(x)

08. [Sharpness] (Command: k k)
Adjusts the screen sharpness.

Transmission
(k)(k)( )(Set ID)( )(Data)(Cr)

Data 00-32: Sharpness 0-50

Acknowledgment
(k)( )(Set ID)( )(OK/NG)(Data)(x)

09. [Color] (Command: k i)
Adjusts the screen colors.

Transmission
(k)(i)( )(Set ID)( )(Data)(Cr)

Data 00-64: Color 0-100

Acknowledgment
(i)( )(Set ID)( )(OK/NG)(Data)(x)

10. [Tint] (Command: k j)
Adjusts the screen tints.

Transmission
(k)(j)( )(Set ID)( )(Data)(Cr)

Data 00-64: Tint Red 50-Green 50

Acknowledgment
(j)( )(Set ID)( )(OK/NG)(Data)(x)

11. [Color Temperature] (Command: x u)
Adjusts the screen color temperature.

Transmission
(x)(u)( )(Set ID)( )(Data)(Cr)

Data 70-D2: 3200K-13000K

Acknowledgment
(u)( )(Set ID)( )(OK/NG)(Data)(x)

12. [Balance] (Command: k t)

Adjusts the sound balance.

Transmission
(k)(t)( )(Set ID)( )(Data)(Cr)

Data 00-64: Left 50-Right 50

Acknowledgment
(t)( )(Set ID)( )(OK/NG)(Data)(x)

* This feature may not be available for all models.

13. [Sound Mode] (Command: d y)

Selects a sound mode.

Transmission
(d)(y)( )(Set ID)( )(Data)(Cr)

Data 01: [Standard]
02: [Music]
03: [Cinema]
04: [Sports]
05: [Game]
08: [AI Sound Pro]
0A: [Clear Voice]

Acknowledgment
(y)( )(Set ID)( )(OK/NG)(Data)(x)

* This feature may not be available for all models.

14. [Mute on] (Command: k e)

Mutes/unmutes audio.

Transmission
(k)(e)( )(Set ID)( )(Data)(Cr)

Data 00: [Mute] (Volume off)
01: Mute off (Volume on)

Acknowledgment
(e)( )(Set ID)( )(OK/NG)(Data)(x)

* This feature may not be available for all models.

15. Volume Control (Command: k f)

Adjusts the playback volume.

Transmission
(k)(f)( )(Set ID)( )(Data)(Cr)

Data 00-64: Volume 0-100

Acknowledgment
(f)( )(Set ID)( )(OK/NG)(Data)(x)

* This feature may not be available for all models.

16. [Current Time] 1 (year/month/day) (Command: f a)

Sets the Clock 1 (year/month/day) values and Auto Time.

Transmission
1. (f)(a)( )(Set ID)( )(Data1)( )(Data2)( )(Data3)(Cr)
2. (f)(a)( )(Set ID)( )(0)(0)( )(Data1)(Cr)

1. When setting Clock 1 (year/month/day)
Data1 00-: 2010 -
Data2 01-0C: January - December
Data3 01-1F: 1-31

* The minimum and maximum values for (Data1) differ depending on the product's release year.
* Enter "fa (Set ID) ff" to view Clock 1 (year/month/day) settings.

2. When Setting Auto Time
Data1 00: [Auto]
01: [Manual]

* To view the set value of the Auto time, enter "fa (Set ID) 00 ff".

Acknowledgment
1. (a)( )(Set ID)( )(OK/NG)(Data1)(Data2)(Data3)(x)
2. (a)( )(Set ID)( )(OK/NG)(0)(0)(Data1)(x)

17. [Current Time] 2 (hour/minute/second) (Command: f x)

Sets the Clock 2 values (hour/minute/second).

Transmission
(f)(x)( )(Set ID)( )(Data1)( )(Data2)( )(Data3)(Cr)

Data1 00-17: 00-23 hours
Data2 00-3B: 00 - 59 minutes
Data3 00-3B: 00-59 seconds

* Enter "fx (Set ID) ff" to view the Time 2 (hour/minute/second) settings.
* This feature is only available when Clock 1 (year/month/day) has been set.

Acknowledgment
(x)( )(Set ID)( )(OK/NG)(Data1)(Data2)(Data3)(x)

18. [No Signal Power Off (15 Min)] (Command: f g)

Sets the monitor to enter Automatic Standby mode if there is no signal for 15 minutes.

Transmission
(f)(g)( )(Set ID)( )(Data)(Cr)

Data 00: [Off]
01: [On]

Acknowledgment
(g)( )(Set ID)( )(OK/NG)(Data)(x)

19. [No IR Power Off (4 hour)] (Command: m n)

Activates Auto Power Off when there is no IR signal for 4 hours.

Transmission
(m)(n)( )(Set ID)( )(Data)(Cr)

Data 00: [Off]
01: [On]

Acknowledgment
(n)( )(Set ID)( )(OK/NG)(Data)(x)

20. [Language] (Command: f i)

Sets the OSD language.

Transmission
(f)(i)( )(Set ID)( )(Data)(Cr)

Data
00: Czech
01: Danish
02: German
03: English
04: Spanish (Europe)
05: Greek
06: French
07: Italian
08: Dutch
09: Norwegian
0A: Portuguese
0B: Portuguese (Brazil)
0C: Russian
0D: Finnish
0E: Swedish
0F: Korean
10: Chinese (Mandarin)
11: Japanese
12: Chinese (Cantonese)
13: Arabic
14: Turkish
15: Polish

Acknowledgment
(i)( )(Set ID)( )(OK/NG)(Data)(x)

* Some languages may not be available for all models.

21. [Default] Settings (Command: f k)

Executes Reset.
(Initialize Screen can only be executed in RGB input mode.)

Transmission
(f)(k)( )(Set ID)( )(Data)(Cr)

Data 00: [Picture Reset]
02: [Reset to Initial Settings]

Acknowledgment
(k)( )(Set ID)( )(OK/NG)(Data)(x)

* This feature may not be available for all models.

22. Current Temperature (Command: d n)

Checks the current temperature of the product.

Transmission
(d)(n)( )(Set ID)( )(Data)(Cr)

Data FF: Status Check

Acknowledgment
(n)( )(Set ID)( )(OK/NG)(Data)(x)

* The temperature is displayed in hexadecimal.

23. [Key] (Command: m c)

Sends a key code for the IR remote control.

Transmission
(m)(c)( )(Set ID)( )(Data)(Cr)

Data IR_KEY_CODE

Acknowledgment
(c)( )(Set ID)( )(OK/NG)(Data)(x)

* For key codes, see IR Codes.
* Some key codes may not be supported depending on the model.

24. Time Elapsed (Command: d l)

Displays the time that has elapsed after your monitor has turned on.

Transmission
(d)(l)( )(Set ID)( )(Data)(Cr)

Data FF: Read status

Acknowledgment
(l)( )(Set ID)( )(OK/NG)(Data)(x)

* The data received is displayed in hexadecimal.

25. Product Serial Number Check (Command: f y)

Checks the serial number of the product.

Transmission
(f)(y)( )(Set ID)( )(Data)(Cr)

Data FF: Check product serial number

Acknowledgment
(y)( )(Set ID)( )(OK/NG)(Data)(x)

* Data is in ASCII format.

26. [Software Version] (Command: f z)

Checks the software version of the product.

Transmission
(f)(z)( )(Set ID)( )(Data)(Cr)

Data FF: Check the software version

Acknowledgment
(z)( )(Set ID)( )(OK/NG)(Data)(x)

27. [White Balance] Red Gain (Command: j m)

Adjusts the red gain value for white balance.

Transmission
(j)(m)( )(Set ID)( )(Data)(Cr)

Data 00-FE: Red Gain 0-254
FF: Checks red gain value

Acknowledgment
(m)( )(Set ID)( )(OK/NG)(Data)(x)

28. [White Balance] Green Gain (Command: j n)

Adjusts the green gain value for white balance.

Transmission
(j)(n)( )(Set ID)( )(Data)(Cr)

Data 00-FE: Green Gain 0-254
FF: Checks green gain value

Acknowledgment
(n)( )(Set ID)( )(OK/NG)(Data)(x)

29. [White Balance] Blue Gain (Command: j o)

Adjusts the blue gain value for white balance.

Transmission
(j)(o)( )(Set ID)( )(Data)(Cr)

Data 00-FE: Blue Gain 0-254
FF: Checks blue gain value

Acknowledgment
(o)( )(Set ID)( )(OK/NG)(Data)(x)

30. [White Balance] Red Offset (Command: s x)

Adjusts the red offset value for white balance.

Transmission
(s)(x)( )(Set ID)( )(Data)(Cr)

Data 00-7F: Red Offset 0-127
FF: Checks red offset value

Acknowledgment
(x)( )(Set ID)( )(OK/NG)(Data)(x)

31. [White Balance] Green Offset (Command: s y)

Adjusts the green offset value for white balance.

Transmission
(s)(y)( )(Set ID)( )(Data)(Cr)

Data 00-7F: Green Offset 0-127
FF: Checks green offset value

Acknowledgment
(y)( )(Set ID)( )(OK/NG)(Data)(x)

32. [White Balance] Blue Offset (Command: s z)

Adjusts the blue offset value for white balance.

Transmission
(s)(z)( )(Set ID)( )(Data)(Cr)

Data 00-7F: Blue Offset 0-127
FF: Checks blue offset value

Acknowledgment
(z)( )(Set ID)( )(OK/NG)(Data)(x)

33. [Backlight] (Command: m g)

Adjusts the backlight brightness.

Transmission
(m)(g)( )(Set ID)( )(Data)(Cr)

Data 00-64: Backlight 0-100

Acknowledgment
(g)( )(Set ID)( )(OK/NG)(Data)(x)

* LED models use this command to adjust the LED Light.

34. [Screen Off] (Command: k d)

Turns off/off the screen.

Transmission
(k)(d)( )(Set ID)( )(Data)(Cr)

Data 00: Screen On
01: Screen Off

Acknowledgment
(d)( )(Set ID)( )(OK/NG)(Data)(x)

* This feature may not be available for all models.

35. [Tile Mode] (Command: d d)

Sets a tile mode and values for the tile rows and columns.

Transmission
(d)(d)( )(Set ID)( )(Data)(Cr)

Data 00-FF: The first byte - tile column
The second byte - tile row

* 00, 01, 10, and 11 mean that the tile mode is off.
* The maximum value may differ depending on the model.

Acknowledgment
(d)( )(Set ID)( )(OK/NG)(Data)(x)

* This feature may not be available for all models.
* If you change the values on a Video Wall model, please reboot for it to work normally.

36. [Tile Mode] Check (Command: d z)

Checks the tile mode.

Transmission
(d)(z)( )(Set ID)( )(Data)(Cr)

Data FF: Check Tile Mode

Acknowledgment
(z)( )(Set ID)( )(OK/NG)(Data1)(Data2)(Data3)(x)

Data1 00: Tile Mode off
01: Tile Mode on
Data2 00-0F: Tile column
Data3 00-0F: Tile row

* This feature may not be available for all models.

37. [Tile ID] (Command: d i)

Sets the tile ID value of the product.

Transmission
(d)(i)( )(Set ID)( )(Data)(Cr)

Data 01-E1: Tile ID 1-225
FF: Checks the Tile ID

* The data value cannot exceed the value of row x column.

Acknowledgment
(i)( )(Set ID)( )(OK/NG)(Data)(x)

* If you enter a value that exceeds the value of row x column for the Data parameter (except for 0xFF), Ack becomes NG.
* This feature may not be available for all models.
* If you change the values on a Video Wall model, please reboot for it to work normally.

38. [Natural Mode] (In Tile Mode) (Command: d j)

To display the image naturally, the part of the image that would normally be displayed in the gap between the monitors is omitted.

Transmission
(d)(j)( )(Set ID)( )(Data)(Cr)

Data 00: [Off]
01: [On]

Acknowledgment
(j)( )(Set ID)( )(OK/NG)(Data)(x)

* This feature may not be available for all models.

39. [DPM (Standby Mode)] (Command: f j)

Sets the DPM(Display Power Management) function.

Transmission
(f)(j)( )(Set ID)( )(Data)(Cr)

Data 00: [Off]
02: 10 seconds
04: 1 minute
05: 3 minutes
06: 5 minutes
07: 10 minutes

Acknowledgment
(j)( )(Set ID)( )(OK/NG)(Data)(x)

* This feature may not be available for all models.

40. Remote Control/Local Key Operation Lock (Command: k m)

Adjusts the remote control/local key (front) lock.

Transmission
(k)(m)( )(Set ID)( )(Data)(Cr)

Data 00: [Off] (Lock Off)
01: [On] (Lock On)

* When the monitor is turned off, the power key works even in On (01) mode.

Acknowledgment
(m)( )(Set ID)( )(OK/NG)(Data)(x)

* This feature may not be available for all models.

41. [Power On Delay] (Command: f h)

Sets the schedule delay for when the power turns on. (Unit: seconds)

Transmission
(f)(h)( )(Set ID)( )(Data)(Cr)

Data 00-FA: Min 0- Max 250 (sec)

Acknowledgment
(h)( )(Set ID)( )(OK/NG)(Data)(x)

* The maximum value may differ depending on the model.

42. [Fail Over] Mode (Command: m i)

Selects the Fail Over mode.

Transmission
(m)(i)( )(Set ID)( )(Data)(Cr)

Data 00: [Off]
01: [Auto]
02: [Manual]

Acknowledgment
(i)( )(Set ID)( )(OK/NG)(Data)(x)

43. [Fail Over] Input (Command: m j)

Selects an input source for fail over. (This feature is only available when Fail Over is set to Manual.)

Transmission
(m)(j)( )(Set ID)( )(Data1)( )(Data2)( )(Data3)( )(Data4)...( )(DataN)(Cr)

Data1-N (Input priority 1-N)
60: RGB
70: DVI-D
90: HDMI1
91: HDMI2
92: OPS/HDMI3/DVI-D
95: OPS/DVI-D
96: HDMI3/DVI-D
97: HDMI3/HDMI2/DVI-D
98: OPS
99: HDMI2/OPS
C0: DISPLAYPORT
C1: DISPLAYPORT/USB-C
C2: HDMI3
C3: HDBaseT

Acknowledgment
(j)( )(Set ID)( )(OK/NG)(Data1)(Data2)(Data3)(Data4)...(DataN)(x)

* Some input signals may not be available for all models.
* The data number (N) may vary depending on the model. (The data number depends on the number of supported input signals.)
* The last data only allows values for items (ex. E0, E1, E2) for Data N above, and may not be supported depending on the model.
* This feature operates as the last input, and supports data in Video format.

44. Remote Control Key Lock (Command: t p)

Configures the settings of the product's remote control key.

Transmission
(t)(p)( )(Set ID)( )(Data)(Cr)

Data 00: Unlocks all keys
01: Locks all keys except Power key
02: Locks all keys

Acknowledgment
(p)( )(Set ID)( )(OK/NG)(Data)(x)

* When the monitor is turned off, the power key works even in the locks on all of the keys (02) mode.

45. [Local Key Operation Lock] (Command: t o)

Configures the local key operation settings of the product.

Transmission
(t)(o)( )(Set ID)( )(Data)(Cr)

Data 00: Unlocks all keys
01: Locks all keys except Power key
02: Locks all keys

Acknowledgment
(o)( )(Set ID)( )(OK/NG)(Data)(x)

* When the monitor is turned off, the power key works even in the locks on all of the keys (02) mode.
* This feature may not be available for all models.

46. Status Check (Command: s v)

Checks the current signal of the product.

Transmission
(s)(v)( )(Set ID)( )(Data)( )(FF)(Cr)

Data 02: Check whether there is a signal
03: Check whether the monitor is in PM Mode
07: Check whether the Top, Bottom and Main temperature sensors are functioning normally.
09: Fan Speed
10: RGB Sensing OK/NG (screen fault detection)
16: Check the humidity value
17: Check the value of the intensity of illumination
18: Check the status value of the slope of the product

Acknowledgment
(v)( )(Set ID)( )(OK/NG)(Data)(Data1)(x)

Data 02 (when a signal is found)
Data1 00: No signal
01: Signal present

Data 03 (when the monitor is currently in PM mode)
Data1 00: Screen is on
01: Screen is off
02: Screen Off Always is activated
03: Sustain Aspect Ratio is activated
04: Screen Off & Backlight On is activated

Data 07 (when checking whether the Top, Bottom and Main temperature sensors are working properly)
Data1 00: All temperature sensors are faulty
01: Top normal, Bottom faulty, Main faulty
02: Top faulty, Bottom normal, Main faulty
03: Top normal, Bottom normal, Main faulty
04: Top faulty, Bottom faulty, Main normal
05: Top normal, Bottom faulty, Main normal
06: Top faulty, Bottom normal, Main normal
07: All temperature sensors are normal
Data 10 (when executing Screen Fault Detection)
Data 1 00: Screen Fault Detection result NG
07: Screen Fault Detection result OK

* When screen Fault Detection is set to Off or not supported, execution results are rendered "NG."

Data 16 (for checking the humidity value)
Data 1 0~100: Reads the %RH value of the current humidity (indicated as a Hex value).

Data 17 (for checking the value of the intensity of illumination)
Data 1 1~1000: Reads the Lux value of the current intensity of illumination (indicated as a Hex value).

Data 18 (for checking the status value of the slope of the product)
Data 1 00: 0 degrees
01: 90 degrees
02: 180 degrees
03: 270 degrees
04: Fallen forward
05: Fallen backward

Data 09 (when checking the fan speed)

Acknowledgment
(v)( )(Set ID)( )(OK/NG)(Data)(Data1_1)(Data1_2)
...(DataN_1)(DataN_2)(x)

Data1_1: 00~ff: First fan speed top 1 Byte
Data1_2: 00~ff: First fan speed bottom 1 Byte
...
DataN_1: 00~ff: Nth fan speed top 1 Byte
DataN_2: 00~ff: Nth fan speed bottom 1 Byte

Fan Speed: Hex 0~2008, Decimal 0~8200

* The data number (N) may vary depending on the model.
* This feature may not be available for all models.

47. [Daylight Saving Time] (Command: s d)

Sets Daylight Savings Time.

Transmission
(s)(d)( )(Set ID)( )(Data1)( )(Data2)( )
(Data3)( )(Data4)( )(Data5)( )(Cr)

Data1 00: Off (Data2-5: FF)
01: Start Time
02: End Time
Data2 01~0C: January - December
Data3 01-06: Week 1 - 6

* The maximum value of [Data3] may vary depending on the date.

Data4 00-06: (Sunday - Saturday)
Data5 00-17: 00 - 23 hours

* If you wish to read the start/end times, enter FF for parameters [Data2] through [Data5].
(Example 1: sd 01 01 ff ff ff ff - Checks the start time.)
(Example 2: sd 01 02 ff ff ff ff - Checks the end time.)

* This feature only works when Clock 1 (year/month/day) and Clock 2 (hour/minute/second) have been set.

Acknowledgment
(d)( )(Set ID)( )(OK/NG)(Data1)(Data2)
(Data3)(Data4)(Data5)(x)

* This feature may not be available for all models.

48. [PM Mode] (Command: s n, 0c)

Sets the PM mode.

Transmission
(s)(n)( )(Set ID)( )(0c)( )(Data)(Cr)

Data 00: [Power Off] (Basic)
01: [Sustain Aspect Ratio]
02: [Screen Off]
03: [Screen Off Always]
04: [Screen Off & Backlight On]
05: [Network Ready]

Acknowledgment
(n)( )(Set ID)( )(OK/NG)(0c)(Data)(x)

* This feature may not be available for all models.

49. [ISM Method] (Command: j p)

Selects an ISM method.

Transmission
(j)(p)( )(Set ID)( )(Data)(Cr)

Data 02: [Orbiter]
04: [White Wash]
08: [Off]
90: [User Image]
91: [User Video]

Acknowledgment
(p)( )(Set ID)( )(OK/NG)(Data)(x)

* This feature may not be available for all models.
* "02: [Orbiter]" is not supported while "91: [User Video]" is turned on.

50. [Network Setting] (Command: s n, 80 or 81 or 82)

Configures network and DNS settings.

Transmission
(s)(n)( )(Set ID)( )(Data1)( )(Data2)( )
(Data3)( )(Data4)( )(Data5)(Cr)

Data1 80: Configures/views the temporary IP mode (Auto/Manual), subnet mask, and gateway.
81: Configures/views the temporary DNS address.
82: Saves temporary settings and views information about the current network.

* If Data1 is 80,
Data2 00: Auto
01: Manual
FF: Views the temporary IP mode (Auto/Manual), subnet mask, and gateway.
* If Data2 is 01 (Manual),
Data3 Manual IP address
Data4 Subnet mask address
Data5 Gateway address

* If Data1 is 81,
Data2 DNS address
FF: Displays the temporary DNS address.
* If Data1 is 82,
Data2 80: Applies the temporary IP mode (Auto/Manual), subnet mask, and gateway.
81: Applies the temporary DNS address
FF: Information on the current network (IP, subnet gateway and DNS)

* An example of settings,
1. Auto: sn 01 80 00
2. Manual: sn 01 80 01 010177223241 255255254000 010177222001(IP:10.177.223.241, subnet: 255.255.254.0, gateway: 10.177.222.1)
3. Network read: sn 01 80 ff
4. DNS setting: sn 01 81 156147035018 (DNS: 156.147.35.18)
5. Applying the settings: sn 01 82 80 (applies the saved IP mode (auto/manual), subnet mask, and gateway), sn 01 82 81 (applies the saved DSN)

* Each IP address contains 12 decimal digits.

Acknowledgment
(n)( )(Set ID)( )(OK/NG)(Data1)(Data)(x)

* This feature is available only for wired networks.
* This feature may not be available for all models.

51. [Power On Status] (Command: t r)

Sets the Power On status of the monitor.

Transmission
(t)(r)( )(Set ID)( )(Data)(Cr)

Data 00: [LST (Last Status)]
01: [STD (Standby)]
02: [PWR (Power On)]

Acknowledgment
(r)( )(Set ID)( )(OK/NG)(Data)(x)

52. Wired [Wake On LAN (Networked Standby Mode)] (Command: f w)

Selects a Wired Wake On LAN option.

Transmission
(f)(w)( )(Set ID)( )(Data)(Cr)

Data 00: [Off]
01: [On]

Acknowledgment
(w)( )(Set ID)( )(OK/NG)(Data)(x)

53. [Screen Rotation] (Command: t h)

Sets the Screen Rotation feature.

Transmission
(t)(h)( )(Set ID)( )(Data) (Cr)

Data 00: [Off]
01: 90 degrees
02: 270 degrees
03: 180 degrees

Acknowledgment
(h)( )(Set ID)( )(OK/NG)(Data)(x)

* This feature may not be available for all models.

54. [Time Sync] (Command: s n, 16)

Sets Time Sync.

Transmission
(s)(n)( )(Set ID)( )(1)(6)( )(Data)(Cr)

Data 00: [Off]
01: [On]

* This feature only works when the monitor is in Master mode.
* This feature does not work if the current time is not set.

Acknowledgment
(n)( )(Set ID)( )(OK/NG)(1)(6)(Data)(x)

* This feature may not be available for all models.

55. [Contents Sync] (Command: t g)

Sets Content Sync.

Transmission
(t)(g)( )(Set ID)( )(Data)(Cr)

Data 00: [Off]
01: [On]

Acknowledgment
(g)( )(Set ID)( )(OK/NG)(Data)(x)

* This feature may not be available for all models.

56. [LAN Daisy Chain] (Command: s n, 84)

Turns on/off LAN Daisy Chain.

Transmission
(s)(n)( )(Set ID)( )(8)(4)( )(Data)(Cr)

Data 00: [Off]
01: [On]

Acknowledgment
(n)( )(Set ID)( )(OK/NG)(8)(4)(Data)(x)

* This feature may not be available for all models.

57. [External Input Rotation] (Command: s n, 85)

Sets the External Input Rotation feature.

Transmission
(s)(n)( )(Set ID)( )(8)(5)( )(Data)(Cr)

Data 00: [Off]
01: 90 degrees
02: 270 degrees
03: 180 degrees

Acknowledgment
(n)( )(Set ID)( )(OK/NG)(8)(5)(Data)(x)

* This feature may not be available for all models.

58. [Beacon] (Command: s n, 88)

Turns on/off Beacon.

Transmission
(s)(n)( )(Set ID)( )(8)(8)( )(Data)(Cr)

Data 00: [Off]
01: [On]

Acknowledgment
(n)( )(Set ID)( )(OK/NG)(8)(8)(Data)(x)

* This feature may not be available for all models.

59. [Brightness Scheduling] Mode (Command: s m)

Selects a Brightness Scheduling mode.

Transmission
(s)(m)( )(Set ID)( )(Data)(Cr)

Data 00: [Off]
01: [On]

Acknowledgment
(m)( )(Set ID)( )(OK/NG)(Data)(x)

* This feature does not work if the current time is not set.
* This feature may not be available for all models.

60. [Brightness Scheduling] (Command: s s)

Sets Brightness Scheduling.

Transmission
(s)(s)( )(Set ID)( )(Data1)( )(Data2)( )(Data3)(Cr)

Data 1
1. f1 to f6 (data reading)
F1: Reads the 1st brightness schedule's data
F2: Reads the 2nd brightness schedule's data.
F3: Reads the 3rd brightness schedule's data.
F4: Reads the 4th brightness schedule's data.
F5: Reads the 5th brightness schedule's data.
F6: Reads the 6th brightness schedule's data.

2. FF: Reads all stored lists

3. e1 to e6 (Deletes one index), e0 (Deletes all indexes)
E0: Deletes all brightness schedules.
E1: Deletes the 1st brightness schedule.
E2: Deletes the 2nd brightness schedule.
E3: Deletes the 3rd brightness schedule.
E4: Deletes the 4th brightness schedule.
E5: Deletes the 5th brightness schedule.
E6: Deletes the 6th brightness schedule.

4. 00-17: 00 - 23 hours
Data 2 00-3B: 00 - 59 minutes
Data 3 00-64: Backlight 0 - 100

* To read or delete a brightness schedule you have set, (Data2)(Data3) must be set to FF.
* If you want to read all configured brightness schedules through FF, do not enter any values in (Data2)(Data3).
* When retrieving all items of the set Brightness Scheduling list through FF, OK will be acknowledged (ACK) even if there is no saved list.

Example 1: ss 01 f1 ff ff – Reads the 1st index data in Brightness Schedule.
Example 2: ss 01 ff - Reads all index data in Brightness Schedule.
Example 3: ss 01 e1 ff ff – Deletes the 1st index data in Brightness Schedule.
Example 4: ss 01 07 1E 46 - Adds a schedule whose time is 07:30 and whose backlight is 70.

Acknowledgment
(s)( )(Set ID)( )(OK/NG)(Data1)(Data2)(Data3)(x)

* This feature may not be available for all models.

61. [Multi Screen] Mode & Input (Command: x c)

Saves and controls Multi Screen modes and inputs.

Transmission
(x)(c)( )(Set ID)( )(Data1)( )(Data2)( )(Data3)( )(Data4)( )(Data5)( )(Cr)

Data1 (Sets MultiScreen mode)
10: PIP
22: PBP2
23: PBP3
24: PBP4
25: PBP3 (1:2:1)
Data2 (Sets the Main input of Multi screen)
Data3 (Sets the Sub1 input of Multi screen)
Data4 (Sets the Sub2 input of Multi screen)
Data5 (Sets the Sub3 input of Multi screen)
80: DVI-D
90: HDMI1
91: HDMI2
92: OPS/HDMI3/DVI-D
95: OPS/DVI-D
96: HDMI3/DVI-D
97: HDMI3/HDMI2/DVI-D
98: OPS
99: HDMI2/OPS
C0: DISPLAYPORT
C1: DISPLAYPORT/USB-C
C2: HDMI3
C3: HDBaseT
F0: SDI 1
F1: SDI 2
F2: SDI 3
F3: SDI 4

Acknowledgment
(c)( )(Set ID)( )(OK/NG)( )(Data1)(Data2)(Data3)(Data4)(Data5)(x)

* This feature may not be available for all models.
* Only the input modes supported by the model works.
* This feature operates as the last input, and supports data in Video format.
* When the Read operation is performed, 00 is returned if it is not for an external input.

62. [Aspect Ratio] (Multi Screen) (Command: x d)

Controls the aspect ratio of Multi Screen.

Transmission
(x)(d)( )(Set ID)( )(Data1)( )(Data2)(Cr)

Data1 01: Controls the Main input
02: Controls the Sub1 input
03: Controls the Sub2 input
04: Controls the Sub3 input
Data2 00: Full Screen
01: Original

Acknowledgment
(d)( )(Set ID)( )(OK/NG)(Data1)(Data2)(x)

* This feature may not be available for all models.

63. [Screen Off] (Multi Screen) (Command: x e)

Turns on/off each screen in the Multi Screen.

Transmission
(x)(e)( )(Set ID)( )(Data1)( )(Data2)(Cr)

Data1 01: Controls the Main input
02: Controls the Sub1 input
03: Controls the Sub2 input
04: Controls the Sub3 input
Data2 00: Screen On
01: Screen Off

* This feature only works when the Multi Screen app is running.
* This feature does not work when there is no signal.

Acknowledgment
(e)( )(Set ID)( )(OK/NG)(Data1)(Data2)(x)

* This feature may not be available for all models.

64. [Screen Off Always] (Command: s n, 0d)

If you activate the Screen Off Always feature, the monitor enters Screen Off mode regardless of whether or not you have activated PM mode.

Transmission
(s)(n)( )(Set ID)( )(0)(d)( )(Data)(Cr)

Data 00: [Off]
01: [On]

Acknowledgment
(n)( )(Set ID)( )(OK/NG)(0)(d)(Data)(x)

* This feature may not be available for all models.

65. Stop Video (Command: k x)

Controls Stop Video.

Transmission
(k)(x)( )(Set ID)( )(Data)(Cr)

Data 00: The Stop Video feature is on.
01: The Stop Video feature is off.

* This feature only works in single input mode.

Acknowledgment
(x)( )(Set ID)( )(OK/NG)(Data)(x)

* This feature may not be available for all models.

66. Wireless [Wake On LAN (Networked Standby Mode)] (Command: s n, 90)

Sets the Wireless Wake-on-LAN feature.

Transmission
(s)(n)( )(Set ID)( )(9)(0)( )(Data)(Cr)

Data 00: [Off]
01: [On]

Acknowledgment
(n)( )(Set ID)( )(OK/NG)(9)(0)(Data)(x)

* This feature may not be available for all models.

67. [OSD Lock] (Command: k l)

Sets OSD Lock.

Transmission
(k)(l)( )(Set ID)( )(Data)(Cr)

Data 00: OSD Lock
01: Unlock OSD Lock

Acknowledgment
(l)( )(Set ID)( )(OK/NG)(Data)(x)

68. [HDMI IT Content] (Command: s n, 99)

Automatically sets the picture mode based on HDMI data.

Transmission
(s)(n)( )(Set ID)( )(9)(9)( )(Data)(Cr)

Data 00: [Off]
01: [On]

Acknowledgment
(n)( )(Set ID)( )(OK/NG)(9)(9)(Data)(x)

* This feature may not be available for all models.

69. [Holiday Setting] (Command: s n, 9b)

Sets holidays.

Transmission
1. (s)(n)( )(Set ID)( )(9)(b)( )
(Data1)( )(Data2)( )(Data3)( )
(Data4)( )(Data5)( )(Data6)(Cr)
2. (s)(n)( )(Set ID)( )(9)(b)( )(Data1)( )(Data2)(Cr)
3. (s)(n)( )(Set ID)( )(9)(b)( )(Data1)(Cr)

1. Setting a Holiday

Data1 Start year
00-: 2010-

Data2 Start month
01-0c: January - December

Data3 Start date
01-1F: 01-31

Data4 For how long from the start year/month/date
01-07: For 1 to 7 days

Data5 Repetition
00: None
01: Every month
02: Every Year

Data6 Repeats the schedule on a date/day-of-the-week basis.
01: On a date basis.
02: On a day-of-the-week basis.

* The minimum and maximum values for (Data1) differ depending on the product's release year.
* You can input a value for [Data 6] only when a value has already been set for [Data 5] (every year or every month).

2. Checking a Schedule

Data1 Select the desired schedule.
F1: Reads the 1st schedule
F2: Reads the 2nd schedule
F3: Reads the 3rd schedule
F4: Reads the 4th schedule
F5: Reads the 5th schedule
F6: Reads the 6th schedule
F7: Reads the 7th schedule

Data2
FF

3. Deleting a Schedule
E0: Deletes all holiday schedules
E1: Deletes the 1st holiday schedule
E2: Deletes the 2nd holiday schedule
E3: Deletes the 3rd holiday schedule
E4: Deletes the 4th holiday schedule
E5: Deletes the 5th holiday schedule
E6: Deletes the 6th holiday schedule
E7: Deletes the 7th holiday schedule

* This feature does not work if the current time is not set.

Acknowledgment
1. (n)( )(Set ID)( )(OK/NG)(9)(b)
(Data1)(Data2)(Data3)(Data4)(Data5)(Data6)(x)
2. (n)( )(Set ID)( )(OK/NG)(9)(b)(f)(1~7)
(Data1)(Data2)(Data3)(Data4)(Data5)(Data6)(x)
3. (n)( )(Set ID)( )(OK/NG)(9)(b)(Data1)(x)

* This feature may not be available for all models.

70. [UPnP] (Command: s n, 9c)

Sets UPnP mode.

Transmission
(s)(n)( )(Set ID)( )(9)(c)( )(Data)(Cr)

Data 00: [Off]
01: [On]

Acknowledgment
(n)( )(Set ID)( )(OK/NG)(9)(c)(Data)(x)

* This feature may not be available for all models.
* Changing UPnP mode results in a reboot.

71. [Home Dashboard Lock] (Command: s n, 9d)

Sets Home Dashboard Lock.

Transmission
(s)(n)( )(Set ID)( )(9)(d)( )(Data)(Cr)

Data 00: Home Dashboard Unlock
01: Home Dashboard Lock

Acknowledgment
(n)( )(Set ID)( )(OK/NG)(9)(d)(Data)(x)

* This feature may not be available for all models.

72. [USB Lock] (Command: s n, 9e)

Sets USB Lock.

Transmission
(s)(n)( )(Set ID)( )(9)(e)( )(Data)(Cr)

Data 00: USB Unlock
01: USB Lock

Acknowledgment
(n)( )(Set ID)( )(OK/NG)(9)(e)(Data)(x)

* This feature may not be available for all models.

73. [Wi-Fi Lock] (Command: s n, 9f)

Sets Wi-Fi Lock.

Transmission
(s)(n)( )(Set ID)( )(9)(f)( )(Data)(Cr)

Data 00: Wi-Fi Unlock
01: Wi-Fi Lock

Acknowledgment
(n)( )(Set ID)( )(OK/NG)(9)(f)(Data)(x)

* This feature may not be available for all models.

74. [Screen Share Lock] (Command: s n, a0)

Sets Screen Share Lock.

Transmission
(s)(n)( )(Set ID)( )(a)(0)( )(Data)(Cr)

Data 00: Screen Share Unlock
01: Screen Share Lock
02: Screen Share Lock (PIN)

Acknowledgment
(n)( )(Set ID)( )(OK/NG)(a)(0)(Data)(x)

* This feature may not be available for all models.
* Changing Screen Share Lock mode results in a reboot.

75. [Play Backup Content] (Command: s n, a1)

When there is no input signal, this feature automatically plays the content stored in the device or runs the set app.

Transmission
1. (s)(n)( )(Set ID)( )(a)(1)( )(Data1)(Cr)
2. (s)(n)( )(Set ID)( )(a)(1)( )(Data1)(Data2)(Cr)

1. Disabling Play Backup Content.
Data1 00: Off

2. Setting Play Backup Content to Auto Capture Images
Data1 01: Auto Capture Images
Data2 01: 30 minutes
02: 1 hour
03: 2 hours
04: 3 hours

3. Setting Play Backup Content to Media Storage
Data1 02: Media Storage

4. Setting Play Backup Content to SuperSign Content
Data1 03: SuperSign Contents

5. Set to SI App / Play via URL
Data 1 04: [SI App / Play via URL]

Acknowledgment
1. (n)( )(Set ID)( )(OK/NG)(a)(1)(Data1)(x)
2. (n)( )(Set ID)( )(OK/NG)(a)(1)(Data1)(Data2)(x)

* This feature may not be available for all models.

76. [Digital Audio Input] (Command: s n, a2)

Sets Digital Audio Input.

Transmission
(s)(n)( )(Set ID)( )(a)(2)( )(Data)(Cr)

Data 00: Digital
01: Analog

Acknowledgment
(n)( )(Set ID)( )(OK/NG)(a)(2)(Data)(x)

* This feature may not be available for all models.

77. [Booting Logo Image] (Command: s n, a3)

Sets Booting Logo Image.

Transmission
(s)(n)( )(Set ID)( )(a)(3)( )(Data)(Cr)

Data 00: [Off]
01: [On]

Acknowledgment
(n)( )(Set ID)( )(OK/NG)(a)(3)(Data)(x)

* This feature may not be available for all models.

78. [SoftAP] (Command: s n, a4)

Sets SoftAP Mode.

Transmission
(s)(n)( )(Set ID)( )(a)(4)( )(Data)(Cr)

Data 00: [Off]
01: [On]

Acknowledgment
(n)( )(Set ID)( )(OK/NG)(a)(4)(Data)(x)

* This feature may not be available for all models.

79. [Natural Size] (Command: s n, a5)

Sets the Natural Size feature.

Transmission
(s)(n)( )(Set ID)( )(a)(5)( )(Data)(Cr)

Data 00-64: Natural Size 0 - 100

Acknowledgment
(n)( )(Set ID)( )(OK/NG)(a)(5)(Data)(x)

* This feature may not be available for all models.

80. Play Saved Internal Media (Command: s n, a8)

Plays media files saved on internal storage. Internal storage media: videos and images stored on the monitor's internal storage after being exported via Contents Management Player.

* Not applicable: Template content, SuperSign content, and playlist content.

Transmission
(s)(n)( )(Set ID)( )(a)(8)( )(Data)(Cr)

Data 01: Play

Acknowledgment
(n)( )(Set ID)( )(OK/NG)(a)(8)( )(Data)(x)

* This feature may not be available for all models.

81. [No Signal Image] (Command: s n, a9)

Sets the No Signal Image feature.

Transmission
(s)(n)( )(Set ID)( )(a)(9)( )(Data)(Cr)

Data 00: [Off]
01: [On]

Acknowledgment
(n)( )(Set ID)( )(OK/NG)(a)(9)(Data)(x)

* This feature may not be available for all models.

82. [Audio Out] (Command: s n, aa)

Sets Audio Out to Off/Variable/Fixed.

Transmission
(s)(n)( )(Set ID)( )(a)(a)( )(Data)(Cr)

Data 00: [Off]
01: [Variable]
02: [Fixed]

Acknowledgment
(n)( )(Set ID)( )(OK/NG)(a)(a)(Data)(x)

* This feature may not be available for all models.

83. [DPM (Standby Mode) Wake Up Control] (Command: s n, 0b)

Controls the DPM Wake Up Control settings.

Transmission
(s)(n)( )(Set ID)( )(0)(b)( )(Data)(Cr)

Data 00: [Clock]
01: [Clock+DATA]

Acknowledgment
(n)( )(Set ID)( )(OK/NG)(0)(b)(Data)(x)

* This feature may not be available for all models.

84. [Fan] Failure Check (Command: d w)

Check the fan malfunction.

Transmission
(d)(w)( )(Set ID)( )(Data)(Cr)

Data FF: Read status

Acknowledgment
(w)( )(Set ID)( )(OK/NG)(Data1)(Data2)(x)

Data1 00: Fan failure
01: Fan normal

Data2 00: 0 faults (Fan Normal)
01: 1 fault
02: 2 faults
03: 3 faults
04: 4 faults
05: 5 faults
06: 6 faults
07: 7 faults
08: 8 faults
09: 9 faults
0A: 10 faults

* This feature may not be available for all models.

85. [Timer Power On] Scheduling (Command: f d)

Sets On Timer settings.

Depending on the model, the number of schedules for Timer Power On can be either 16 or 21.

Transmission

(f)(d)( )(Set ID)( )(Data1)( )(Data2)( )(Data3)(Cr)

Data1

1. To f1h ~ ffh, a1h ~ a6h (data reading)

F1 ~ FF: Read data for the 1st to 15th times for Timer Power On.

A1 ~ A6: Read data for the 16th to 21st times for Timer Power On.

2. e1h ~ efh, b1h~b6h (Deletes one index), e0h (Deletes all indexes)

E0: Delete all Timer Power On's

E1 ~ EF: Delete the 1st to 15th times for Timer Power On.

B1 ~ B6: Delete the 16th ~ 21st times for Timer Power On.

3. 01h to 0ch (Timer Power On days setting)

02: Repeat Daily

03: Repeat from Monday to Friday

04: Repeat from Monday to Saturday

05: Repeat from Saturday to Sunday

06: Repeat on Sunday

07: Repeat on Monday

08: Repeat on Tuesday

09: Repeat on Wednesday

0A: Repeat on Thursday

0B: Repeat on Friday

0C: Repeat on Saturday

Data2 00-17: 00 - 23 hours

Data3 00-3B: 00 - 59 minutes

* To read or delete a Timer Power On you have set, [Data2] [Data3] must be set to FF.

Example 1: fd 01 f1 ff ff - Reads the 1st index data in Timer Power On.

Example 2: fd 01 e1 ff ff - Reads the 1st index data in Timer Power On.

Example 3: fd 01 04 02 03 - Sets the Timer Power On as Monday - Saturday 02:03.

* This feature only works when Clock 1 (year/month/day) and Clock 2 (hour/minute/second) have been set.

Acknowledgment

(d)( )(Set ID)( )(OK/NG)(Data1)(Data2)(Data3)(x)

86. [Time to Off] Scheduling (Command: f e)

Sets Off Timer settings.

Depending on the model, the number of schedules for Timer Power Off can be either 16 or 21.

Transmission

(f)(e)( )(Set ID)( )(Data1)( )(Data2)( )(Data3)(Cr)

Data1

1. To f1h ~ ffh, a1h ~ a6h (data reading)

F1 ~ FF: Read data for the 1st to 15th times for Timer Power On.

A1 ~ A6: Read data for the 16th to 21st times for Timer Power On.

2. e1h ~ efh, b1h ~ b6h (Deletes one index), e0h (Deletes all indexes)

E0: Delete all Timer Power Off's

E1 ~ EF: Delete the 1st to 15th times for Timer Power Off.

B1 ~ B6: Delete the 16th ~ 21st times for Timer Power Off.

3. 01h to 0ch (Timer Power Off days setting)

02: Repeat Daily

03: Repeat from Monday to Friday

04: Repeat from Monday to Saturday

05: Repeat from Saturday to Sunday

06: Repeat on Sunday

07: Repeat on Monday

08: Repeat on Tuesday

09: Repeat on Wednesday

0A: Repeat on Thursday

0B: Repeat on Friday

0C: Repeat on Saturday

Data2 00-17: 00 - 23 hours

Data3 00-3B: 00 - 59 minutes

* To read or delete a Timer Power Off you have set, [Data2] [Data3] must be set to FF.

Example 1: fe 01 f1 ff ff - Reads the 1st index data in Timer Power Off.

Example 2: fe 01 e1 ff ff - Reads the 1st index data in Timer Power Off.

Example 3: fe 01 04 02 03 - Sets the Timer Power Off as Monday - Saturday 02:03.

* This feature only works when Clock 1 (year/month/day) and Clock 2 (hour/minute/second) have been set.

Acknowledgment

(e)( )(Set ID)( )(OK/NG)(Data1)(Data2)(Data3)(x)

87. LCIN008 Control (Command: s n, b8)

It controls the LCIN008 device.

Transmission
(s)(n)( )(Set ID)( )(b)(8)( )(Data1)(Data2)(Cr)

Data 1 00: LCIN008 Power
01: LCIN008 Brightness

Data 2
1. For Power
0 x 00: Off
0 x 01: On
2. For Brightness
0 x ff: Read
0 x 00 ~ 0 x 64: Applies a set value

Acknowledgment
(n)( )(Set ID)( )(OK/NG)(b)(8)(Data1)(Data2)(x)

* This feature may not be available for all models.
* Other commands do not work for a certain time after applying.

88. [Transfer Control] (Command: s n, cb)

It transfers the command to RS232C out.

Transmission
(s)(n)( )(Set ID)( )(c)(b)( )(Data)(Cr)

Data Data that goes out to RS232C out

Acknowledgment
(n)( )(Set ID)( )(OK/NG)(c)(b)(Data)(x)

Data Response value of Data transferred to RS232C out

* This feature may not be available for all models.
* Other commands do not work for a certain time after applying.

89. Multichannel (Command: s n, 76)

It changes the channel.

Transmission
(s)(n)( )(Set ID)( )(7)(6)( )(Data)(Cr)

Data 01 - 09: Channel to switch to

Acknowledgment
(n)( )(Set ID)( )(OK/NG)(7)(6)(Data)(x)

* This feature may not be available for all models.

90. Change SetID (Command: j x)

Changes and checks SetID.

1. When it is a general LED model

Transmission
(j)(x)( )(Set ID)( )(Data1)( )(Data2)(Cr)

Data1 Data2: 00 01 ~ 03 e8 (1~1000)

Acknowledgment
(x)( )(Set ID)( )(OK/NG)(Data1)(Data2)(x)

2. When it is another model (read only)

Transmission
(j)(x)( )(Set ID)( )(Data)(Cr)

Data FF: Check the value of SetID
The returned value is indicated as a value of hexadecimal numbers corresponding to the ASCII code value.
(Return when SetID is 1: x 01 OK31x
Return when SetID is 1000: x 3e8 OK31303030x)

Acknowledgment
(x)( )(Set ID)( )(OK/NG)(Data)(x)

* It works even if the SetID does not match.
* This feature may not be available for all models.

91. [Gamma] (Command: s n, ad)

Sets Gamma Mode.

Transmission
(s)(n)( )(Set ID)( )(a)(d)( )(Data)(Cr)

Data 00: [low](1.9)
01: [medium](2.2)
02: [High1](2.4)
03: [High2](BT.1886)

Acknowledgment
(n)( )(Set ID)( )(OK/NG)(a)(d)(Data)(x)

* This feature may not be available for all models.

92. [Black Level] (Command: s n, ae)

It sets the Black Level mode.

Transmission
(s)(n)( )(Set ID)( )(a)(e)( )(Data)(Cr)

Data 00: Low
01: High
02: Auto

Acknowledgment
(n)( )(Set ID)( )(OK/NG)(a)(e)(Data)(x)

* This feature may not be available for all models.

93. [Ultra HD Deep Color] (Command: s n, af)

It sets the Ultra HD Deep Color mode for each input.

Transmission
(s)(n)( )(Set ID)( )(a)(f)( )(Data1)( )(Data2)(Cr)

Data1 70: DVI-D
90: HDMI1
91: HDMI2
92: OPS/HDMI3/DVI-D
95: OPS/DVI-D
96: HDMI3/DVI-D
97: HDMI3/HDMI2/DVI-D
98: OPS
99: HDMI2/OPS
C0: DISPLAYPORT
C1: DISPLAYPORT/USB-C
C2: HDMI3
C3: HDBaseT

Data2 00: [Off]
01: [On]

Acknowledgment
(n)( )(Set ID)( )(OK/NG)(a)(f)(Data1)(Data2)(x)

* This feature may not be available for all models.

94. [Sync Mode] (Command: s n, b0)

Sets Sync Mode.

Transmission
(s)(n)( )(Set ID)( )(b)(0)( )(Data)(Cr)

Data 00: [Slave Mode]
01: [Master Mode]

Acknowledgment
(n)( )(Set ID)( )(OK/NG)(b)(0)(Data)(x)

* This feature may not be available for all models.

95. [Input Manager] (Command: s n, b1)

It sets labels by input.

Transmission
(s)(n)( )(Set ID)( )(b)(1)( )(Data1)( )(Data2)(Cr)

Data1 90: HDMI1
91: HDMI2
92: OPS/HDMI3/DVI-D
95: OPS/DVI-D
96: HDMI3/DVI-D
97: HDMI3/HDMI2/DVI-D
98: OPS
99: HDMI2/OPS
C0: DISPLAYPORT
C1: DISPLAYPORT/USB-C
C2: HDMI3
C3: HDBaseT

Data2 00: Video
01: Normal

Acknowledgment
(n)( )(Set ID)( )(OK/NG)(b)(1)(Data1)(Data2)(x)

* This feature may not be available for all models.

96. [PC/OPS Power Control] (Command: s n, 8b)

It sets the OPS/PC Power Control mode.

Transmission
(s)(n)( )(Set ID)( )(8)(b)( )(Data)(Cr)

Data 00: [Disable]
01: [Sync (On)]
02: [Sync (On/Off)]

Acknowledgment
(n)( )(Set ID)( )(OK/NG)(8)(b)(Data)(x)

* This feature may not be available for all models.

97. [LED Local Dimming] (Command: s n, c1)

It sets [LED Local Dimming].
(A feature to set the LED Local Dimming in a sub-item under [Setting] → [Display] → [Advanced Settings])

Transmission
(s)(n)( )(Set ID)( )(c)(1)( )(Data)(Cr)

Data 00: [Off]
01: [On]

Acknowledgment
(n)( )(Set ID)( )(OK/NG)(c)(1)(Data)(x)

* This feature may not be available for all models.

98. [Scan Inversion] (Command: s n, 87)

It controls the on/off status of Scan Inversion.

Transmission
(s)(n)( )(Set ID)( )(8)(7)( )(Data)(Cr)

Data 00: Off
01: On

Acknowledgment
(n)( )(Set ID)( )(OK/NG)(8)(7)(Data)(x)

* This feature may not be available for all models.
* If you change the values on a Video Wall model, please reboot for it to work normally.

99. [Frame Control] (Command: s n, b7)

It controls the Frame Control.

Transmission
(s)(n)( )(Set ID)( )(b)(7)( )(Data)(Cr)

Data 00: Off
01: On

Acknowledgment
(n)( )(Set ID)( )(OK/NG)(b)(7)(Data)(x)

* This feature may not be available for all models.
* If you change the values on a Video Wall model, please reboot for it to work normally.

100. [Average Picture Level Auto Control] (Command: s n, be)

Sets Average Picture Level Auto Control.

Transmission
(s)(n)( )(Set ID)( )(b)(e)( )(Data)(Cr)

Data 00: [Off]
01: [On]

Acknowledgment
(n)( )(Set ID)( )(OK/NG)(b)(e)(Data)(x)

* This feature may not be available for all models.

101. Read Brightness Value (Command: m u)

Checks the brightness value.

Transmission
(m)(u)( )(Set ID)( )(FF)(Cr)

Acknowledgment
(u)( )(Set ID)( )(OK/NG)(Data1)(Data2)(Data3)
(Data4)(Data5)(Data6)(Data7)(x)

Data 1 00~64: Backlight PWM figure 0-100
Data 2 00~ff: The upper 1-byte of the value measured by the CA210.
Data 3 00~ff: The lower 1-byte of the value measured by the CA210.
The CA210 measurement is Hex: 0000~ffff, Decimal: 0 - 65535
Data 4 00~ff: The upper 1-byte of the value measured by BLU 1 Sensor.
Data 5 00~ff: The lower 1-byte of the value measured by BLU 1 Sensor.
Data 6 00~ff: The upper 1-byte of the value measured by BLU 2 Sensor.
Data 7 00~ff: The lower 1-byte of the value measured by BLU 2 Sensor.
The BLU measurement is Hex: 0000~ffff, Decimal: 0 - 65535

* The CA210 measurement is entered as “Calibration” when the product is released from the factory. It is Default 0 before the calibration.
* This feature may not be available for all models.

102. [Screen Fault Detection] (Command: t z)

Sets the Screen Fault Detection feature.

Transmission
(t)(z)( )(Set ID)( )(Data)(Cr)

Data 00: [Off]
01: [On]

Acknowledgment
(z)( )(Set ID)( )(OK/NG)(Data)(x)

* This feature may not be available for all models.

103. [Stereo Mode] (Command: s n, c2)

Controls Stereo Mode.

Transmission
(s)(n)( )(Set ID)( )(c)(2)( )(Data)(Cr)

Data 00: Left/Right
01: Left/Left
02: Right/Right

Acknowledgment
(n)( )(Set ID)( )(OK/NG)(c)(2)(Data)(x)

* This feature may not be available for all models.

104. [HDR Picture Mode] (Command: s n, c4)

Selects a HDR Picture Mode.

Transmission
(s)(n)( )(Set ID)( )(c)(4)( )(Data)(Cr)

Data 00: Mall/QSR
01: General
02: Gov./Corp.
04: Education

Acknowledgment
(n)( )(Set ID)( )(OK/NG)(c)(4)(Data)(x)

* Depending on the model, some picture modes may not be supported.
* It works only when the HDR content is running.

105. [Dynamic Tone Mapping] (Command: s n, c5)

Selects Dynamic Tone Mapping.

Transmission
(s)(n)( )(Set ID)( )(c)(5)( )(Data)(Cr)

Data 00: [Off]
01: [On]

Acknowledgment
(n)( )(Set ID)( )(OK/NG)(c)(5)(Data)(x)

* Depending on the model, some picture modes may not be supported.
* It works only when the HDR content is running.

106. [LED Local Dimming] (Command: s n, c6)

Sets the LED Local Dimming.
(A feature to set the LED Local Dimming in a sub-item under [Settings] → [Display] → [Picture User Settings] → [Brightness Settings])

Transmission
(s)(n)( )(Set ID)( )(c)(6)( )(Data)(Cr)

Data 00: [Off]
01: [low]
02: [Medium]
03: [High]

Acknowledgment
(n)( )(Set ID)( )(OK/NG)(c)(6)(Data)(x)

* This feature may not be available for all models.

107. [USB2 to HDBaseT] (Command: s n, c3)

Sets USB2 to HDBaseT.

Transmission
(s)(n)( )(Set ID)( )(c)(3)( )(Data)(Cr)

Data 00: [Off]
01: [On]

Acknowledgment
(n)( )(Set ID)( )(OK/NG)(c)(3)(Data)(x)

* This feature may not be available for all models.

108. [Change Password] (Command: s n, a7)

Changes password.

Transmission
(s)(n)( )(Set ID)( )(a)(7)( )(Data1)(Data2)(Data3)(Data4)(Data5)(Data6)( )(Data7)(Data8)(Data9)(Data10)(Data11)(Data12)(Cr)

Data 1~6: 0~9 (Previously set password)
Data 7~12: 0~9 (New password)

Acknowledgment
(n)( )(Set ID)( )(OK/NG)(a)(7)( )(Data1)(Data2)(Data3)(Data4)(Data5)(Data6)( )(Data7)(Data8)(Data9)(Data10)(Data11)(Data12)(x)

* This feature may not be available for all models.

109. [Brightness Range Adjustment] (Command: s n, ab)

Adjust the brightness range.

Transmission
(s)(n)( )(Set ID)( )(a)(b)( )(Data1)( )(Data2)(Cr)

Data 1 00: Minimum brightness control
01: Maximum brightness control
Data 1 00~64: Range control

Acknowledgment
(n)( )(Set ID)( )(OK/NG)(a)(b)(Data1)(Data2)(x)

* This feature may not be available for all models.
* Data2 only supports Hex values that are multiples of 5.
* The range of minimum brightness value cannot exceed the range of maximum brightness, and the range of maximum brightness value cannot be less than the range of minimum brightness.

110. [Color Calibration] (Command: s n, d6)

Selects Color Calibration.

Transmission
(s)(n)( )(Set ID)( )(d)(6)( )(Data)(Cr)

Data 00: Off
01: On

Acknowledgment
(n)( )(Set ID)( )(OK/NG)(d)(6)(Data)(x)

* It may not be supported depending on the model.

111. [Quiet Mode] (Command: s n, c7)

Selects Quiet Mode.

Transmission
(s)(n)( )(Set ID)( )(c)(7)( )(Data)(Cr)

Data 00: Off
01: On

Acknowledgment
(n)( )(Set ID)( )(OK/NG)(c)(7)(Data)(x)

* It may not be supported depending on the model.

112. [Quick Start+] (Command: s n, 0e)

Selects Quick Start+ Mode.

Transmission
(s)(n)( )(Set ID)( )(0)(e)( )(Data)(Cr)

Data 00: Off
01: On

Acknowledgment
(n)( )(Set ID)( )(OK/NG)(0)(e)(Data)(x)

* It may not be supported depending on the model.

113. Vectorscope On/Off (Command: s n, e7)

Controls the on/off function of the Vectorscope.

Transmission
(s)(n)( )(Set ID)( )(e)(7)( )(Data)(Cr)

Data 00: Off
01: On

Acknowledgment
(n)( )(Set ID)( )(OK/NG)(e)(7)(Data)(x)

* It may not be supported according to the model.

114. Waveform On/Off (Command: s n, e8)

Controls the on/off function of the Waveform.

Transmission
(s)(n)( )(Set ID)( )(e)(8)( )(Data)(Cr)

Data 00: Off
01: On

Acknowledgment
(n)( )(Set ID)( )(OK/NG)(e)(8)(Data)(x)

* It may not be supported according to the model.

115. False Color Mode (Command: s n, e9)

Sets the False Colour mode.

Transmission
(s)(n)( )(Set ID)( )(e)(9)( )(Data)(Cr)

Data 00: Off
01: Turn on the Zebra pattern
02: Turn on the Colour pattern

Acknowledgment
(n)( )(Set ID)( )(OK/NG)(e)(9)(Data)(x)

* It may not be supported according to the model.

116. False Color – Zebra (Command: s n, ea)

Sets the Zebra pattern value for the False Colour.

Transmission
(s)(n)( )(Set ID)( )(e)(a)( )(Data)(Cr)

Data 00~64 : Zebra pattern 0~100

Acknowledgment
(n)( )(Set ID)( )(OK/NG)(e)(a)(Data)(x)

* It may not be supported according to the model.

117. False Color – Color (Command: s n, eb)

Sets the Colour pattern value for the False Colour.

Transmission
(s)(n)( )(Set ID)( )(e)(b)( )(Data)(Cr)

Data 00~64 : Color pattern 0~100

Acknowledgment
(n)( )(Set ID)( )(OK/NG)(e)(b)(Data)(x)

* It may not be supported according to the model.

118. SDR/HDR Signal Format (Command: s n, ec)

Sets the SDR/HDR signal format.

Transmission
(s)(n)( )(Set ID)( )(e)(c)( )(Data)(Cr)

Data 00: Auto
01: SDR
02: HDR

Acknowledgment
(n)( )(Set ID)( )(OK/NG)(e)(c)(Data)(x)

* It may not be supported according to the model.

119. HDR EOTF (Command: s n, ed)

Sets the HDR EOTF value.

Transmission
(s)(n)( )(Set ID)( )(e)(d)( )(Data)(Cr)

Data 00: Auto
01: PQ100
02: PQ200
03: PQ300
04: PQ400
05: PQ500
06: PQ600
07: PQ700
08: PQ800
09: PQ900
0A: PQ1000
0B: PQ2000
0C: PQ4000
0D: PQ10000
0E: HLG

Acknowledgment
(n)( )(Set ID)( )(OK/NG)(e)(d)(Data)(x)

* It may not be supported according to the model.

120. Phase Shift (Command: s n, ee)

Sets the phase shift value.

Transmission
(s)(n)( )(Set ID)( )(e)(e)( )(Data)(Cr)

Data 0000~0168: Shift value 0~360

Acknowledgment
(n)( )(Set ID)( )(OK/NG)(e)(e)(Data)(x)

* It may not be supported according to the model.

121. Gen Lock (Command: s n, dc)

Controls the on/off function of Gen Lock.

Transmission
(s)(n)( )(Set ID)( )(d)(c)( )(Data)(Cr)

Data 00: Gen Lock turned off
01: Gen Lock turned on

Acknowledgment
(n)( )(Set ID)( )(OK/NG)(d)(c)(Data)(x)

* It may not be supported according to the model.

122. [Ultra HD Deep Color] (Command: s n, af)

Sets the Ultra HD Deep Color mode for each input.

Transmission
(s)(n)( )(Set ID)( )(a)(f)( )(Data1)( )(Data2)(Cr)

Data1 70: DVI-D
90: HDMI1
91: HDMI2
92: OPS/HDMI3/DVI-D
93: HDMI4
95: OPS/DVI-D
96: HDMI3/DVI-D
97: HDMI3/HDMI2/DVI-D
98: OPS
99: HDMI2/OPS
C0: DISPLAYPORT
C1: DISPLAYPORT/USB-C
C2: HDMI3
C3: HDBaseT

Data2 00: Off
01: 4K
02: 8K

Acknowledgment
(n)( )(Set ID)( )(OK/NG)(a)(f)(Data1)(Data2)(x)

* It may not be supported according to the model.
* The 8K item of (Data2) is supported only in models that support 8K.

123. [Smart Brightness Control] (Command: s n, 55)

Sets the Smart Brightness Control.

Transmission
(s)(n)( )(Set ID)( )(5)(5)( )(Data)(Cr)

Data 00: Manual
01: Highlight
02: Basic
03: Nearby

Acknowledgment
(n)( )(Set ID)( )(OK/NG)(5)(5)(Data)(x)

* It may not be supported according to the model.

124. Macro Preset (Command: s n, 8d)

Sets the Macro Preset for the Cinema LED.

Transmission
(s)(n)( )(Set ID)( )(8)(d)( )(Data)(Cr)

Data 01~10 : Preset 1~16

Acknowledgment
(n)( )(Set ID)( )(OK/NG)(8)(d)(Data)(x)

* It may not be supported according to the model.

125. Douser Open/Close (Command: s n, 8e)

Sets the Douser open/close for the Cinema LED.

Transmission
(s)(n)( )(Set ID)( )(8)(e)( )(Data)(Cr)

Data 00: Open
01: Close

Acknowledgment
(n)( )(Set ID)( )(OK/NG)(8)(e)(Data)(x)

* It may not be supported according to the model.

126. Video Position (Command: s n, 8f)

Sets the video position for the Cinema LED.

Transmission
(s)(n)( )(Set ID)( )(8)(f)( )(Data1)( )(Data2)(Cr)

Data1+Data2 0000~01BC : -222~222 (4K)
0000~00DE : -111~222 (2K)

Acknowledgment
(n)( )(Set ID)( )(OK/NG)(8)(f)(Data1)(Data2)(x)

* It may not be supported according to the model.
* The data ranges of the 4K and 2K models are different.
* The minimum range value for each model corresponds to Data 0x0000.

** e.g. In the case of 4K models
-222 (0x0000) ~ 222 (0x01BC(444))

** e.g. In the case of 2K models
-111 (0x0000) ~ 111 (0x00DE(222))

127. [SI Server Setting] (Command: s n, ca)

Sets the SI server.

Transmission
(s)(n)( )(Set ID)( )(c)(a)( )(Data1)(Data2)...(DataN)(Cr)

* The number of Data inputs varies depending on the input value for Data1.

1) SI Server IP (SI Server IP)
Data1 01
Data2 First field of IP address
Data3 Second field of IP address
Data4 Third field of IP address
Data5 Fourth field of IP address

e.g. When setting IP as 192.168.0.1, sn (Set ID) ca 01 C0 A8 00 01

2) Port Number
Data1 02
Data2 Upper 1 byte of the port number
Data3 Lower 1 byte of the port number
(Data2+Data3 0000~FFFF(0~65535))

e.g. When setting the port number as 22, sn (Set ID) ca 02 00 16

3) Secure connection on/off (secure connection)
Data1 03
Data2 00: Off
01: On

4) FQDN on/off (fully qualified domain on/off)
Data1 04
Data2 00: Off
01: On

5) FQDN value (fully qualified domain name)
Data1 05
Data2 01 ~ 40: Length of the FQDN value (0~64)
Data3 21 ~ FE: FQDN value (ASCII code)
...
DataN 21 ~ FE: FQDN value (ASCII code)

e.g. When transferring URL *http://www.abc.com*,
- Data2: Length of the URL (0x12)
- Data3~: Convert each character to its ASCII code value

-> sn 01 ca 05 12 68 74 74 70 3a 2f 2f 77 77 77 2e 61 62 63 2e 63 6f 6d

6) Launch Mode
Data1 06
Data2 00: None
01: Local
02: Remote
03: USB

7) Application Type
Data1 07
Data2 00: ZIP
01: IPK

8) Auto Set On/Off
Data1 08
Data2 00: Off
01: On

9) Local Application Upgrade
Data1 09
Data2 00: USB
01: Remote

Acknowledgment
(n)( )(Set ID)( )(OK/NG)(c)(a)(Data1)(Data2)...(DataN)(x)

* The input value of Data1 determines the number of Data inputs and the length of the ACK.
* It may not be supported according to the model.

TROUBLESHOOTING

» Each model may have different points to check.
» For information on your PC settings, refer to the Windows Help.

Model corresponding to sentence color

COMMON	VIDEO WALL	SMALL INCH	ENCLOSURE	OLED	STRETCH	TOUCH

Issues Related to Use

- The power won't turn on.
  - Check if the power cord is correctly plugged into the power outlet.
  - When operating in below zero temperature, the enclosure may not work for up to one hour to raise the internal temperature of the enclosure.
  - For models with a circuit breaker, check whether the circuit breaker has been connected properly. The switch of the circuit breaker must be set to on (red).
  - Try turning the power on after disconnecting the AC adapter and cleaning the contacting port.
  - Ensure whether LAN cable is damaged or not when using POE.
  - Do not connect AC adapter when using POE power.
- The 'Unknown Product' message appears when the product is connected.
  - Check if the driver of PC(graphics card) has been installed.
  - Check if the plug and play function is supported by the PC(graphics card) user manual.

Issues Related to Screen (Video)

- A message saying 'No signal' or 'Invalid Format' appears.
  - The signal cable is not connected between the PC and the product, or the cable connection status is unstable. Check the signal cable.
  - Access the input menu to check the input signal.
  - The signal from the PC (Graphics card) is out of the vertical or horizontal frequency range of the product. Adjust the frequency range by referring to the specifications in this manual.
- The position of the screen is incorrect.
  - Check if the graphics card resolution and frequency are supported by the product. If the frequency exceeds the supported range, use PC settings to set the resolution to the recommended value.
  - D-Sub analog signal - Press the **AUTO** button in the remote control to automatically select the optimal screen status that fits into the current mode. If the adjustment is not satisfactory, adjust the display settings manually in the OSD menu.

- The screen is displayed abnormally.
  - Connect the signal cable that matches with the source input signal.
  - Condensation may appear on the screen. It will disappear in a certain period of time after the product is powered on.
  - The condensation formed inside the product is a natural phenomenon and is not covered under warranty. (IPX6 is a standard to protect the product from 100L of water per minute and not from infiltration of moisture in the air into the set.)
  - When connecting the panel and the Signage box, check their serial numbers and make sure they match. If the serial numbers match, unplug the power cord and plug it in again to run the Clear Panel Noise feature. (The system will reboot automatically after running the feature.)
    You can also run the feature in ⚙ **(SETTINGS)** → [Display] → [Advanced Settings] → [OLED Panel Care] → [Pixel Cleaning] menu.
- The PC BIOS configuration screen is not displayed correctly.
  - On some PCs, the BIOS configuration screen may not display correctly because the atypical aspect ratio is not supported before the graphics card driver is configured. This is not a problem of the product; it is due to the design of the graphics card's BIOS configuration screen aspect ratio. To access the PC BIOS configuration screen, please connect a standard aspect ratio (4:3 or 16:9) monitor, then perform the BIOS configuration.
- Images are flickering or fluttering on the screen.
  - If you turn the monitor on when it is cold, the screen may flicker. This is normal.
  - Make sure that the current resolution and frequency settings of the graphics card are supported by the monitor.
- Stripes appear in the background.
  - D-Sub analog signal - Press the **AUTO** button in the remote control to automatically select the optimal screen status that fits into the current mode. If the adjustment is not satisfactory, adjust the display settings manually in the OSD menu.
- Horizontal noise appears or the characters look blurred.
  - D-Sub analog signal - Press the **AUTO** button in the remote control to automatically select the optimal screen status that fits into the current mode. If the adjustment is not satisfactory, adjust the display settings manually in the OSD menu.
- The image is not displayed.
  - Check that the cable is properly connected between the panel and the Signage box.

Issues Related to Screen (Color)

- Screen has poor color resolution (16 colors).
  - Use PC settings to set the color to 24 bits (True Color) or above.
- Screen color is unstable or mono-colored.
  - Check the connection status of the signal cable. Or, re-insert the PC graphics card.
- Black spots or bright spots appear on the screen.
  - Some pixels (red, green, blue, black) are visible on the screen due to the unique characteristics of the display panel. This is not a malfunction of the product.
- The screen's brightness seems dark.
  - Adjust brightness and contrast again.
  - Backlight may need repair.
  - If the internal temperature of the enclosure rises, the screen's brightness may darken. Clean the heat exchanger or filter in the enclosure periodically.

Issues Related to Sound

- There is no sound output.
  - See if the audio cable is connected properly.
  - Adjust the volume of the product or external device.
  - See if the sound is set properly.
- Sound is too dull.
  - Select the appropriate equalizer sound.
- Sound is too low.
  - Adjust the volume of the product or external device.
- For some models, you will need to purchase external speakers separately since they do not have speakers built-in.

Other Issues

- The power suddenly turned off.
  - Check if the auto-off function is activated on the settings related time.
  - Power source has not being supplied properly. See if the product power cord is connected properly.
  - Check the power control settings.
  - If the internal temperature of the enclosure rises, the power may shut down. Clean the heat exchanger or filter in the enclosure periodically.
  - Check if the fan is working properly.
    View the fan status in ⚙ **(SETTINGS)** → [General] → [System Information] → [Fan Status].

⚠ CAUTION

- Since afterimage can occur when a specific fixed screen is used for a long time, To reduce after-images, it is recommended not to exceed the recommended daily operation time set for the screen size and to display the video content with a small number of fixed characters or logos.

  Recommended daily operation time (30/55 inches: 18 hours, 65 inches: 12 hours)
- A few horizontal lines may appear on the screens while running the [Clear Panel Noise] feature. This is normal, so there is no need for concern. If the power is turned on or a power failure occurs while the [Clear Panel Noise] feature is running, the feature may not work properly.
- Turn the power on five minutes after running the [Clear Panel Noise] feature.
- [Clear Panel Noise]: Correct issues that may arise on the screen when it is turned on for a long period of time.
- Use the [Screen Protection Mode Setting] feature in [OLED Panel Settings] to effectively prevent the formation of an afterimage.

Issues Related to Touch

- Touch does not respond.
  - This may occur when the USB cable between PC and product is not connected. Remove the USB cable and connect it again in 10 seconds.
  - Make sure that your PC's power cord is firmly plugged into a power outlet and restart your PC.
  - Touch may not respond when the system is down due to the unstable network. Reconnect the LAN cable or restart your PC.
  - If your PC and product are not connected using a signal cable, touch does not respond. Check the signal cable connection.
  - Touch may not respond when the product is powered off. Check the product power.
  - If you do not use a grounded outlet, it may cause a break or touch error. Always connect the power cord to a grounded outlet.
  - Check if the screen is currently on.
  - A break or touch error may occur as below case.

    If touching the screen only with nail or fingertip

    If holding the tip of the touch pen or near the tip of the touch pen

    If using the touch pen while pressing it with strong force on the screen
- The location of a touch does not correspond to the touch coordinates.
  - This may occur when the touch screen is not calibrated properly. Change your tablet PC settings.
- A touch is applied to a monitor other than the one I intended.
  - This may occur if the monitor is not set as the default monitor when you are using multiple monitors. Set the monitor as the default monitor.
  - This may occur when the touch screen is not calibrated properly. Change your tablet PC settings.
- Multi-touch does not respond.
  - The content played (e.g. Paint, etc.) may not support Multi-touch points. Make sure that you use a content that supports Multi-touch point.
  - Remove the USB cable and connect it again in 10 seconds.
  - Run the content (e.g. Paint, etc.) again.
  - Restart your PC.
  - On the edge of the touch screen, multi-touch may work unstably.
  - If the interval between two touches is too short, a touch error may occur.

Image sticking

- After-image appears when the product is turned off.
  - If you use a fixed image for a long time, the pixels may be damaged. Use the screen-saver function.
  - When a dark image is displayed on the screen after an image with high contrast (black and white or gray), this may cause image sticking. This is normal for display products.
- When the LCD panel displays a static image for an extended period of time, it can cause a voltage difference between the electrodes that operate the liquid crystals. When the voltage difference between the electrodes builds up over time, liquid crystals have a tendency to remain aligned in one direction. During this process, a previously displayed image remains visible. This phenomenon is referred to as image sticking.
- Image sticking does not occur when using constantly changing images but may occur when using a fixed image for an extended period of time. Therefore, it is recommended that you use the instructions below to decrease the likelihood of image sticking occurring when using a fixed image. It is recommended that you change the screen at least once every 12 hours at the very minimum; if done more frequently, the prevention of image sticking is more effective.
- Recommended operating conditions

1 Change the background and the character colors using the same time interval.
  - When changing colors, using complementary colors helps to prevent image sticking.

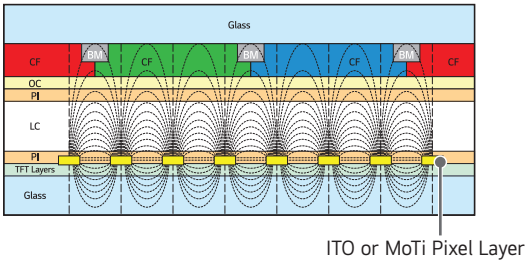

2 Change the image using the same time interval.
  - Make sure that the characters or images before changing the image remain in the same location after changing the image.

LG