MAXHUB XBar W70 kit

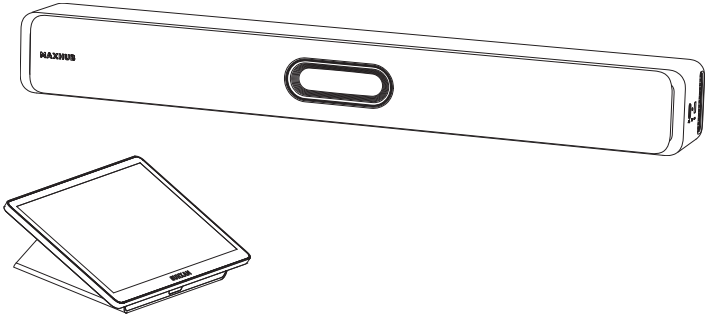

Quick Start Guide

V1.1

MAXHUB

Table of Contents

I. Package Contents 02

II. Product Introduction 03

III. Installation 07

IV. Basic Connection 16

V. Software and Deployment 18

Thank you for choosing **MAXHUB** product.
To ensure that you are able to fully utilize the capabilities of the product, we ask that you please read this quick start guide carefully and thoroughly before using the device. Should you have any questions or require assistance, please do not hesitate to contact our technical support team for guidance.

Safety Information

- **Be Careful of Electric Shock or Fire**

(1) This device is not waterproof, please keep it dry; if water is immersed in this product, please shut down immediately and contact the customer service center according to the prompt provided by the customer service center before using it again.
(2) Never place this device and accessories near the burning flames or other heat sources, including direct sunlight.
(3) This device should be turned off and unplugged before lightting storms.

- **Be Careful of Short Circuit or Catching Fire**

(1) Before connecting this device to an electrical outlet, please make sure that the power supply voltage matches the voltage value printed on the back or bottom of the product. Never connect the product to an electrical outlet when the voltage is different.

- **Take Care Not to Injure or Damage this Device.**

(1) Never place this device or any objects on a power cord or other electronic devices.
(2) If this product is transported at a temperature below 5°C, please unpack the product and wait until the temperature reaches room temperature before connecting it to a power outlet.
(3) This product comes with sharp objects, please handle it carefully so as to avoid injury to the user or scratching the appearance of the product or damaging the internal parts of the product.

- **Be Careful of Overheat**

(1) Never install this device in an enclosed space. Always leave at least 4 inches space around the product for ventilation.

Care For the Product

(1) Clean this device only with a piece of microfiber cleaning cloth.

Care For the Environment

(1) This device applies recyclable high-performance materials and components. Never dispose of this product with other household wastes. Please understand the local regulations on the sorting collection of electronic products.
(2) Proper disposal of these products helps to avoid potential negative effects on the environment and human body health.

Maintenance & Servicing

(1) Please contact professional service personnel for all repair services.
(2) Please do not insert any sharp object into the inside of the device.
(3) Please do not drop or hit the device to avoid damaging it.

Regulatory Notice

Regulatory and certification information can be found in the provided **Regulatory Notices** document or at the official website: https://www.maxhub.com/en/support/?#trigger-download-center.

Technical Support

Please visit the official website: www.maxhub.com for more information about the product documents, software, firmware upgrade, FAQs, etc. Should you have any questions or concerns, please do not hesitate to contact our technical support team for help.

Hereby, Guangzhou Shirui Electronics Co., Ltd. declares that the this product is compliant with the essential requirements. The complete Declaration of Conformity may be requested through the following postal address: MAXHUB EUROPE B.V. BEURSPLEIN 37, 3011AA ROTTERDAM, NETHERLANDS.

i. XBar W70 Package:

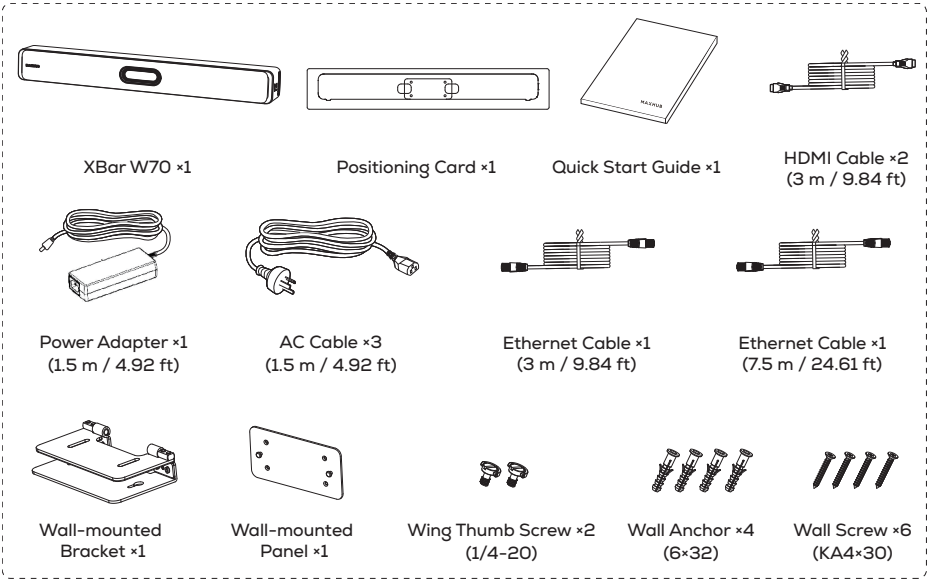

ii. Touch Console TCP31T Package:

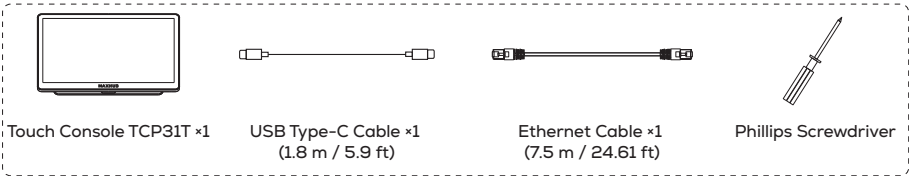

NOTE

The power cord may vary in different regions, please refer to the actual product.

II. Product Introduction

i. XBar W70 Introduction:

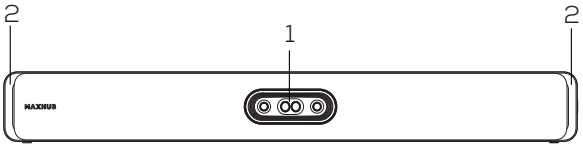

Front

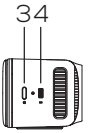

Right

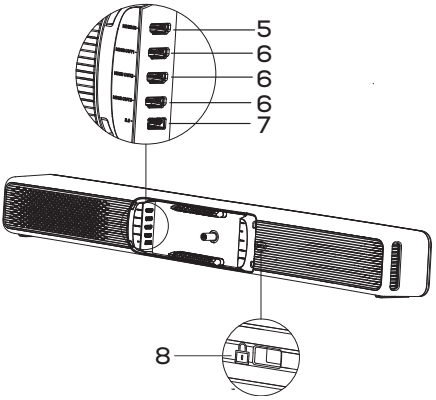

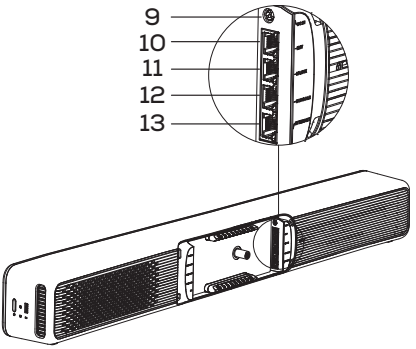

Back

No.	Item	Description
1	Camera	Quad-lens camera with an automatic privacy shutter.
2	Indicator Light	Indicates the state of the device.
3	Power Button	1. Press once to turn on the device. 2. Press and hold for 5 seconds to turn off the device.
4	USB-A 2.0 (With Port Shutter)	For firmware update and debug.
5	HDMI In	HDMI Ingest for content sharing.
6	HDMI Out 1/2/3	To connect to the display or TV.
7	USB-A 3.0	To connect third-party device for data transmission.
8	Kensington Lock Hole	To secure the device with a Kensington lock.
9	DC In	For DC power supply.
10	RJ45 Port (EXT)	To connect MAXHUB exclusive accessories.
11	RJ45 Port (M LINK)	For BYOD wired connection (MAXHUB exclusive).
12	RJ45 Port (CONSOLE)	To connect the touch console.
13	RJ45 Port (INTERNET)	For network connection.

LED Status:

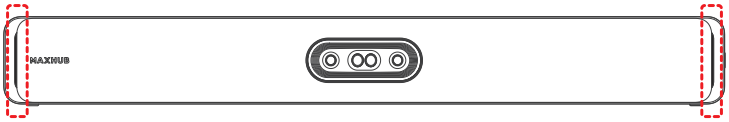

LED Status	Indication
White solid	Power on / Standby / Microphone unmute
Green fast flashing (On and Off flash for **0.3s** alternately)	Incoming call
Green solid	In a call
Red solid	Microphone mute
White breathing (White flashing slowly)	Firmware upgrade

Privacy Shutter Status:

System Status	Shutter Status
Power Off	Shutter Close
Power On (Not in Use)	Shutter Close
Power On (In Use)	Shutter Open

ii. Touch Console TCP31T Introduction:

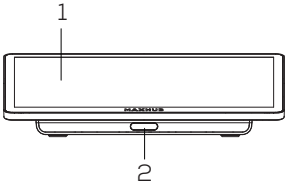

Front

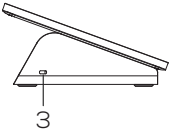

Left Side

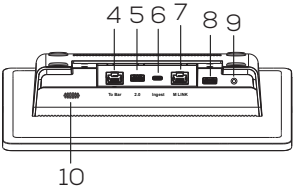

Back

No.	Item	Description
1	Touch Screen	For display and touch control.
2	Motion Sensor	PIR sensor for automatic wake-up.
3	Kensington Lock Hole	To secure the device with a Kensington lock.
4	RJ45 Port (To Bar)	To connect to the XBar W70.
5	USB-A Port (2.0)	For standard connection to USB Audio Accessories (keyboard, mouse, etc.).
6	USB-C Port (Ingest)	For USB-C content sharing from your laptop.
7	RJ45 Port (M LINK)	Connects to the XBar W70 for BYOD mode.
8	USB-A Port (2.0)	Only for wireless dongle pairing.
9	Audio Out	3.5 mm jack for audio output.
10	Ultrasound Speaker	For transmitting ultrasound signals.

III. Installation

i. XBar W70 Installation:

When connecting the XBar W70 to other devices, you need to assemble the cable cover on the back of the W70.

Step 1: Turn the screws D-ring counterclockwise and remove the cable cover.

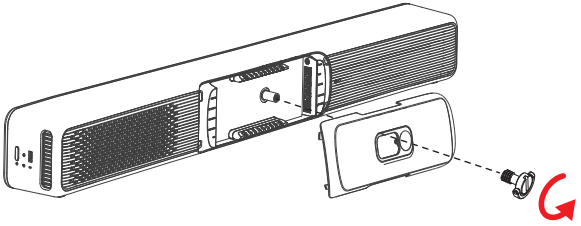

Step 2: Connect to other devices with the according cables and arrange the cables properly.

Option 1: Align the cables to both sides as needed.

Option 2: Route the cables through the hole on the cable cover.

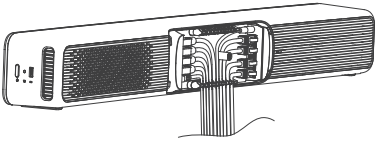

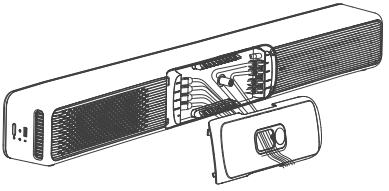

Step 3: Place the cable cover back and turn the screws D-ring clockwise until the cable cover is securely attached to the device.

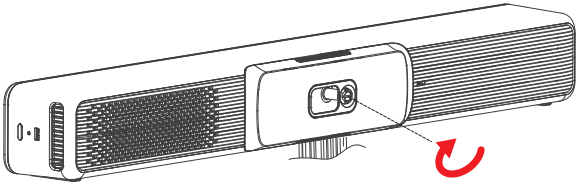

Before installing the device, please make sure that the following accessories are included in the package:

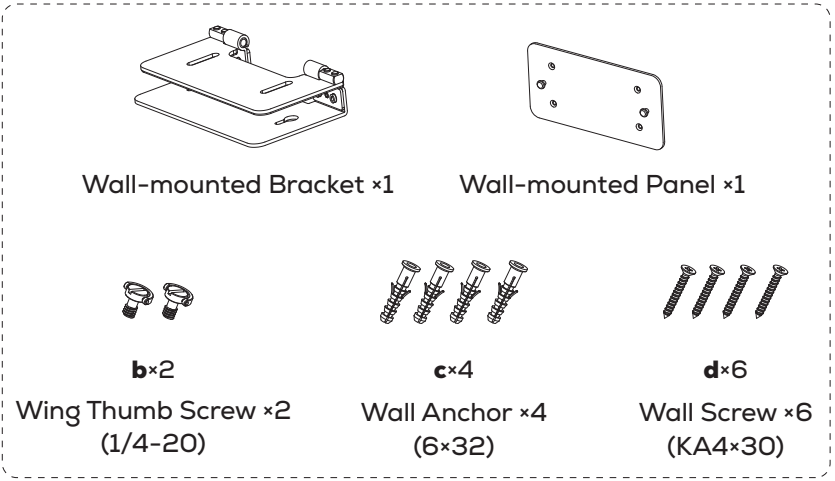

Bracket Introduction:

The bracket includes **A** part and **B** part. Each part has two different sides. You may need to seperate or rotate either part for installation.

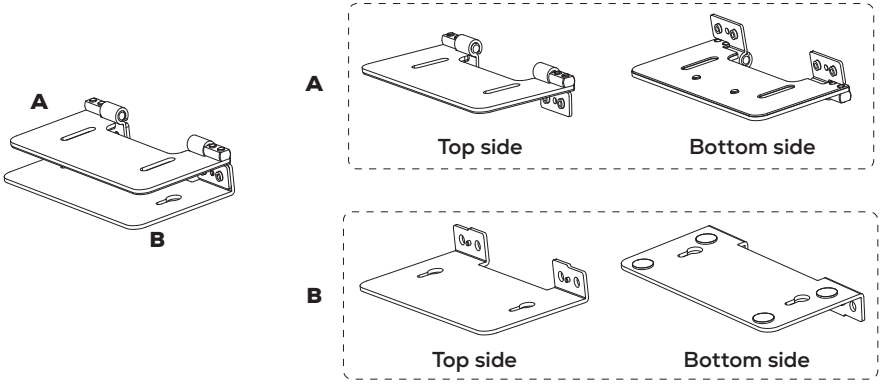

For XBar W70, you have two options to install it:

a. **Mounting to a wall (as default).**

b. **Mounting on a desktop.**

Depending on your needs, you can install the device by following the steps below.

Option 1. Mount to a wall

Step 1: Determine the position of the XBar W70.

The mounting height affects your camera view. So you need to install W70 at proper position:

1) Keep the distance between the W70 and the TV **at least 10 mm/0.4 inch** (recommended distance: **50 mm/1.97 inch**).

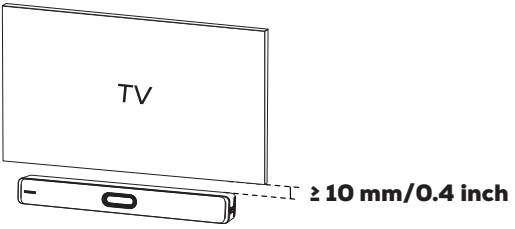

2) Confirm the XBar W70 mounting position according to the installation height.

Installation Height	Recommended Position
1.1 ~ 1.2 m (3.6 ~ 3.9 ft)	Below the TV
1.8 ~ 2 m (5.9 ~ 6.6 ft)	Above the TV

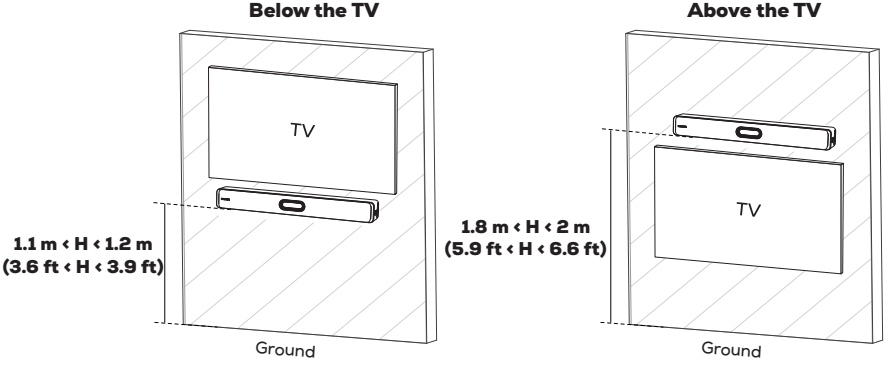

Step 2: Mount the XBar W70 to the wall.

❶

Stick the positioning card onto the mounting position and drill **4** punching holes.

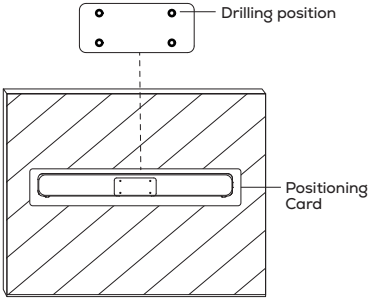

Recommended drilling hole size:
Hole diameter: 6 mm
Hole depth: 32mm

❷

Insert 4 pieces of wall anchors **c** into the punching holes.

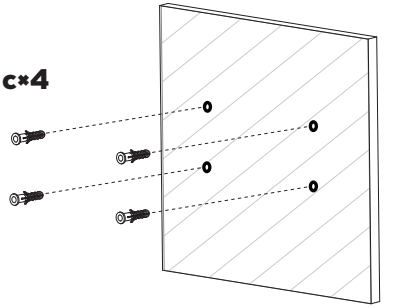

❸

Fix the wall-mounted panel to the installed wall anchors with 4 wall screws **d**.

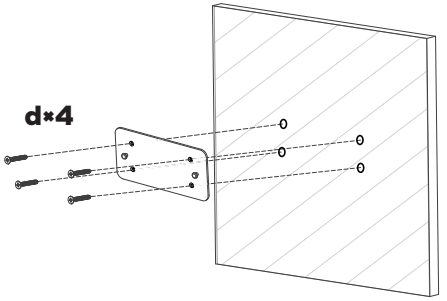

❹

Open the wall-mounted bracket at 90° to the wall, and hang the bracket on the installed panel securely.

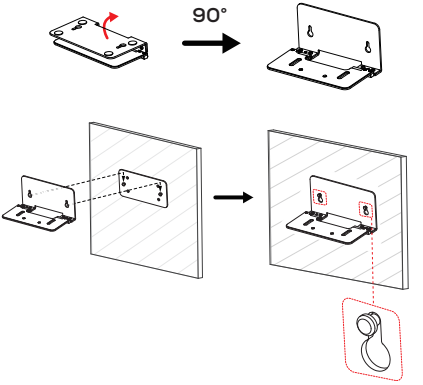

5

Mount the XBar W70 **above or below** the TV.

1) Secure the XBar W70 to the bracket with two wing thumb screws b.
2) Rotate the installed XBar W70 at 90°.
3) Turn the screws D-ring counterclockwise and remove the cable cover to plug in the cables as needed.

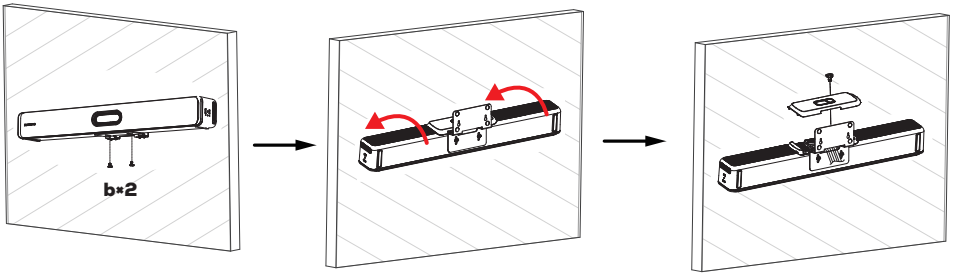

4) Place the cable cover back after arrange the cables properly, and turn the screws D-ring clockwiselug.
5) Rotate the XBar W70 down to the bracket and adjust the camera tilt.

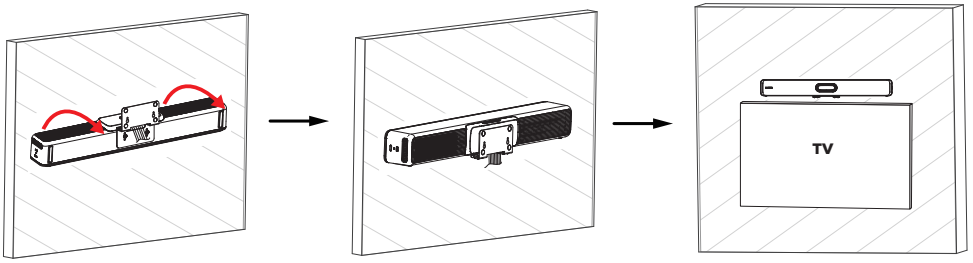

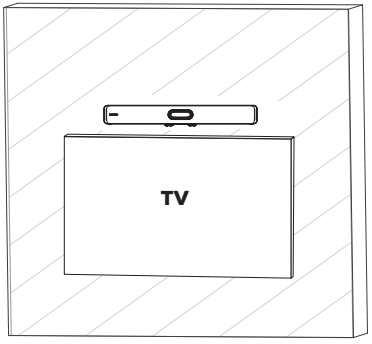

Above the TV

or

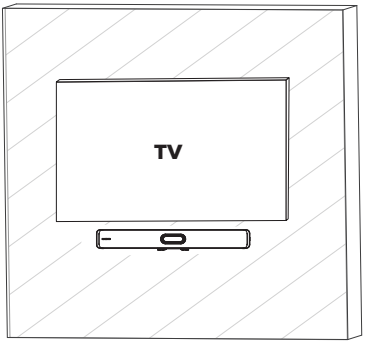

Below the TV

Option 2: Mount on a Flat Surface

1

Remove the four screws from the joint to seperate the two parts of the bracket into **A** and **B**.

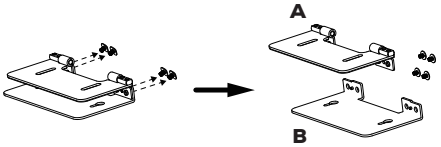

2

Rotate the **B** part **180°** and tighten the four screws back to the bracket.

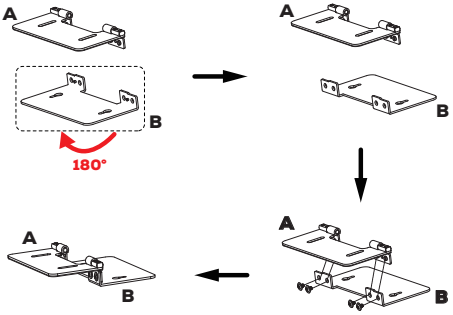

3

Flip the whole brakcet **180°**, and rotate the **B** part to be ready for XBar installation.

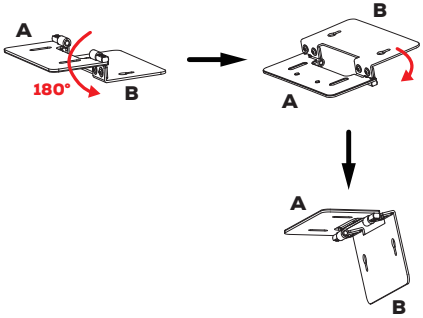

4

Rotate **A** part back **90°** to make sure that the bracket is level with the bottom of the W70.

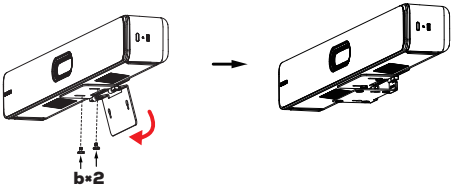

Adjust the Camera Tilt:

When mounting the XBar W70 to the wall or on a desktop, it is always recommended to adjust the angle of the XBar W70 within 10° up or down for your camera view.

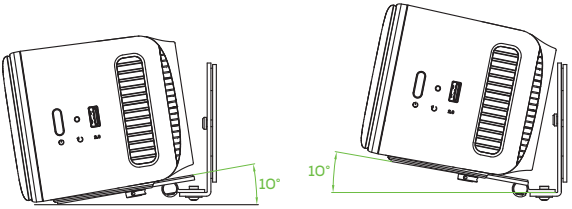

Wall Mounting

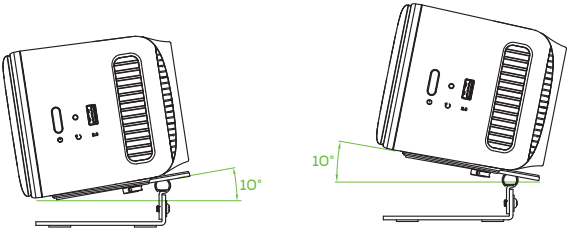

Desktop Mounting

Reference angle:

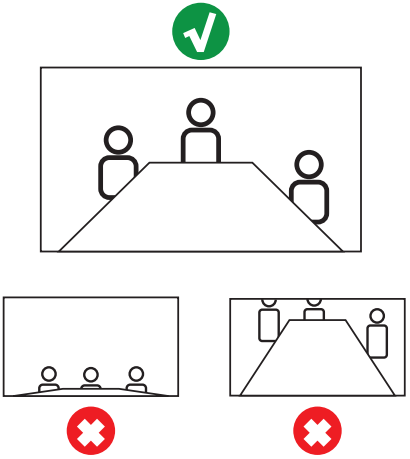

ii. Touch Console TCP31T Installation (Optional):

* Wall mounting accessories and screws must be purchased separately.

For the installation of TCP31T, you have two options:

Option 1: Place on a Flat Surface.

Option 2: Mount on a Wall.

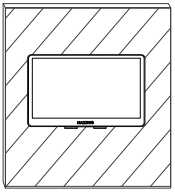

Please follow the steps below for wall mounting of the TCP31T:

Before wall mounting, please prepare the optional wall-mounting accessories and screws first (purchase separately), as shown below:

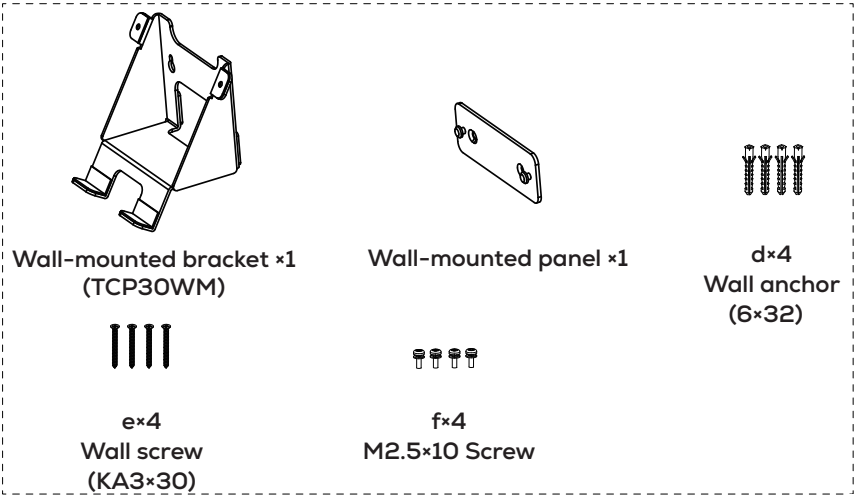

1

Drill two punching holes based on the wall-mounted panel and insert 2 pieces of wall anchor **d**.

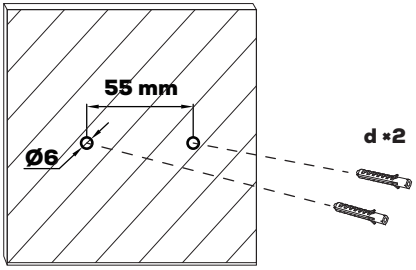

Recommended drilling hole size:
Hole diameter: 6 mm
Hole depth: 32 mm
Hole center distance: 55 mm

2

Secure the wall-mounted panel to the hole with two pieces of wall screw **e**.

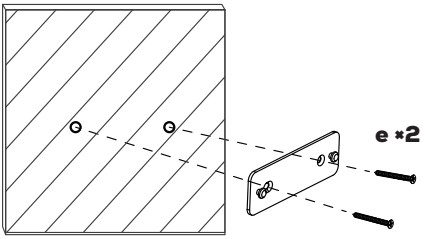

3

Loosen 2 screws on the back of the touch console, and secure the bracket TCP30WM to the console by tighting 2 pieces of wing thumb screw **f**.

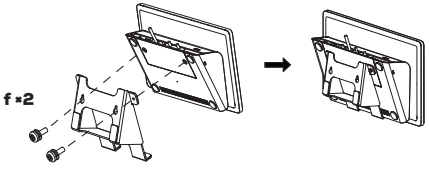

4

Attach the touch console to the 2 keyhole slots on the wall-mounted panel securely.

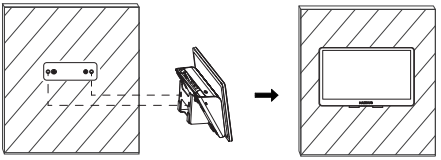

NOTE

This method of wall mounting installation is applicable to walls such as concrete or brick.

IV. Basic Connection

Option 1: Connect the Touch Console TCP31T to your PC via a Type-C cable.

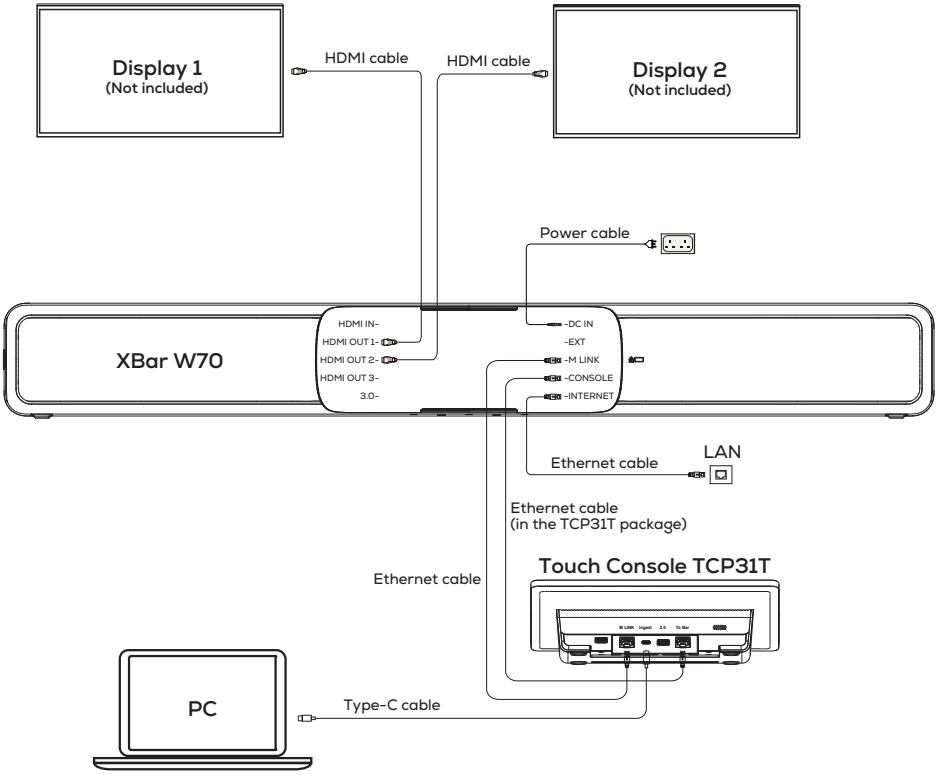

Option 2: Connect the XBar W70 to your PC via a HDMI cable.

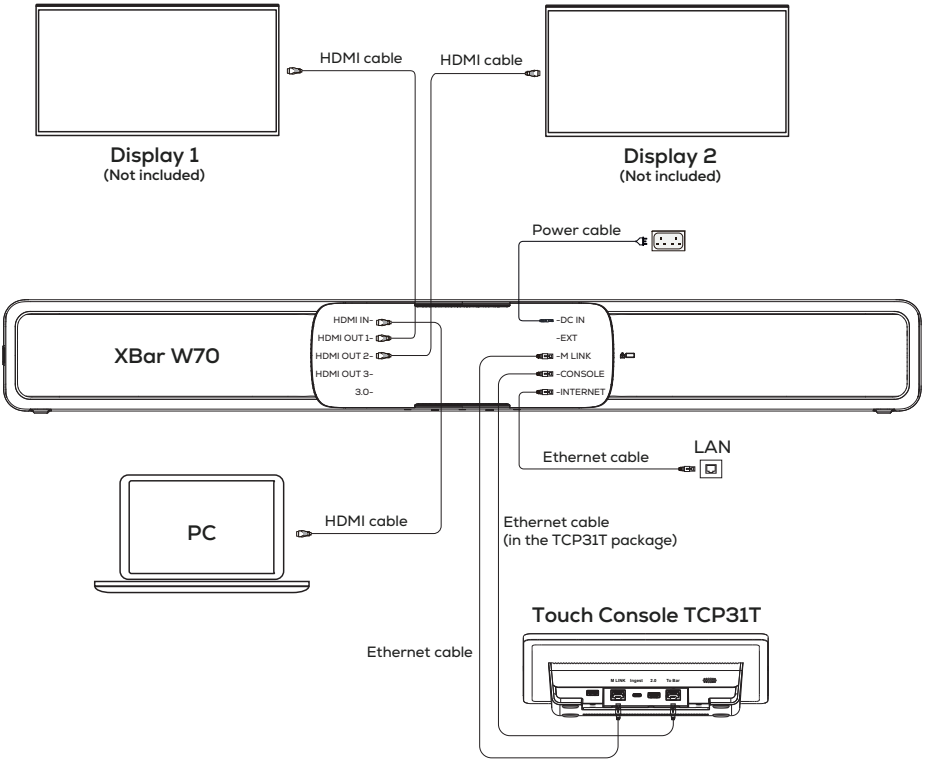

* For more details about wiring and cabling, please refer to the user manual on the official websit: https://www.maxhub.com/en/support/?#trigger-download-center.

V. Software and Deployment

1. Initial Setup

After the XBar W70 and Touch Console TCP31T are powered on, it will launch the Microsoft Teams Rooms System on the console and goes to the setup page.

For the initial setup, you need to initialize **User Agreement, Verification code, Email Address, Password, etc.**

Then the home screen page is as below:

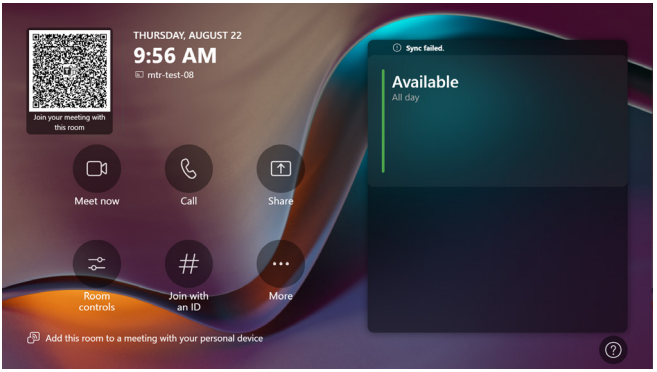

2. Switch Account

By default, the system includes two built-in Windows accounts: **Skype** and **Administrator**. You can switch between the two accounts as needed.

- **Switch from Skype to Administrator**

In the Microsoft Teams mode, go to **More -> Settings**, then click **Windows Settings** to enter the Administrator **Log** page.

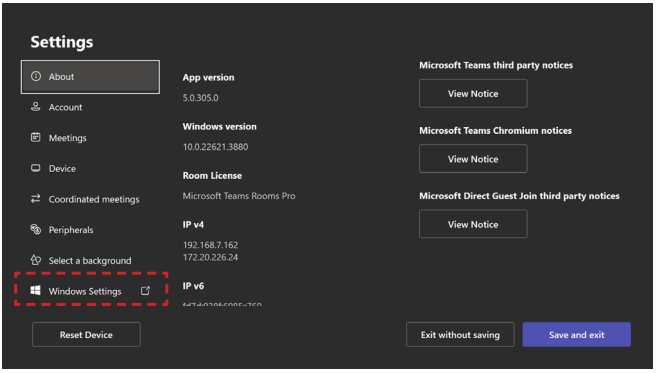

- **Switch from Administrator to Skype**

In the Windows mode, select **Windows Key -> Administrator -> Skype** to enter the Skype **Sign In** page.

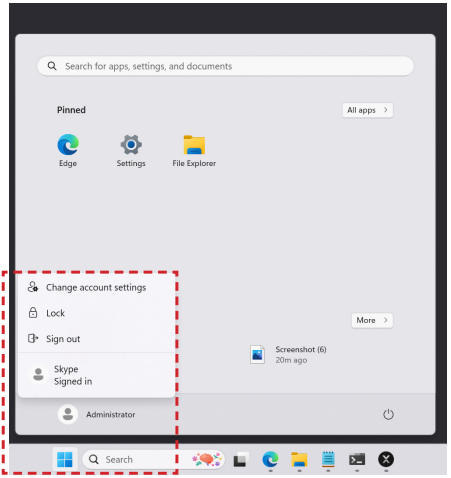

3. Change Administrator Password

1) Login to the Administrator account.
2) Go to **Setting -> Accounts -> Password -> Change**
3) Enter the original password (default: **sfb**) and then the new password.

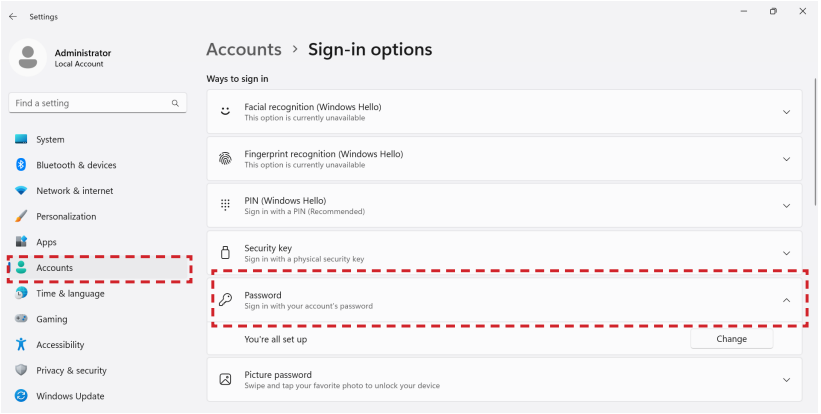

4. BYOD Mode

1) Use a USB-C cable to connect XBar W70 to your laptop.

2) Go to **BYOD -> Enter BYOD Mode.**

3) Then you can adjust the **volume, mute/unmute, camera mode, zoom in/out, direction, camera preset**, etc.

4) Click the **Exit** icon, you can switch BYOD mode to Teams.

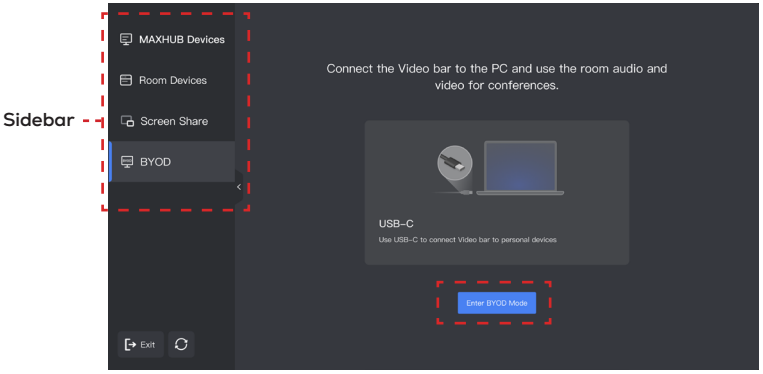

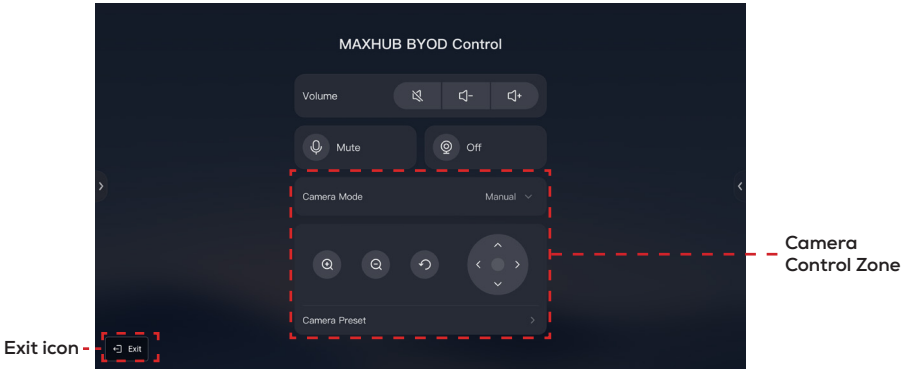

MAXHUB

www.maxhub.com sales@maxhub.com MAXHUB MAXHUB.Global maxhub-overseas/