TP-3306

AP-ASM-TR-02 for ActivPanel using AP-WALLMNT-2 with BB400

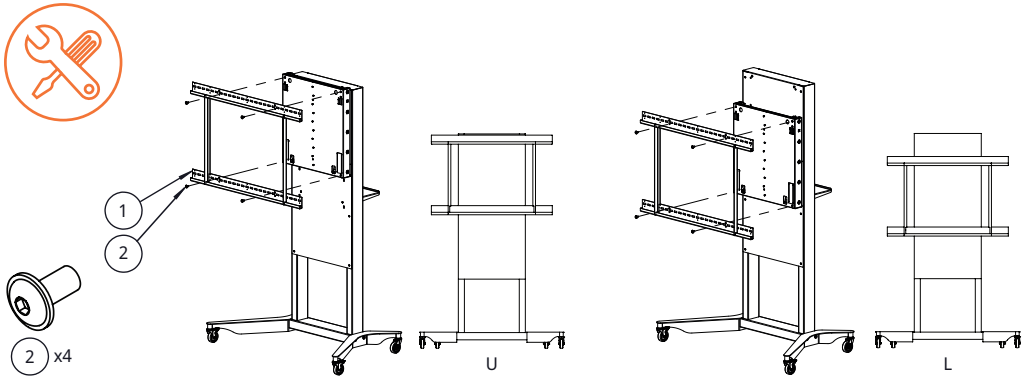

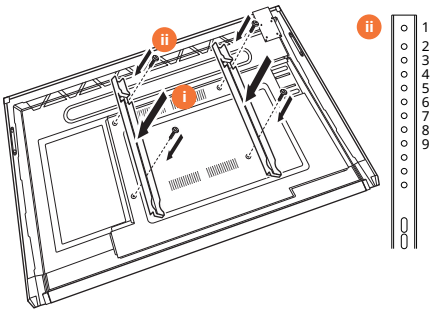

		Recommended maximum height			Lowest system height		
	VESA			mm / " (±5mm/0.2")			mm / " (±5mm/0.2")
APLX-65	600 x 400	4	U	1961 / 77.2"	9	L	1626 / 64.0"
APLX-75	800 x 400	9	U	1915 / 75.4"	9	L	1695 / 66.7"
APLX-86	800 x 600	1	L	1888 / 74.3"	1	L	1888 / 74.3"
AP10-A65	600 x 400	4	U	1967 / 77.5"	9	L	1632 / 64.3"
AP10-A75	800 x 400	8	U	1973 / 77.7"	5	L	1730 / 68.1"
AP10-A86	800 x 600	1	L	1892 / 74.5"	1	L	1892 / 74.5"
AP10-B65	600 x 400	8	U	1929 / 75.9"	9	L	1686 / 66.4"
AP10-B75	800 x 400	5	U	1920 / 75.6"	5	L	1700 / 66.9"
AP10-B86	800 x 600	1	L	1893 / 74.5"	1	L	1893 / 74.5"
APLE-75	800 x 400	9	U	1828 / 72.0"	9	L	1608 / 63.3"
APLE-86	800 x 600	1	L	1840 / 72.4"	1	L	1840 / 72.4"

© 2025 Promethean Limited