Sign	VER	Date	Change Description	Designer
\	1.0	\	初版发行	\
1	\	\	\	\
2				
3				

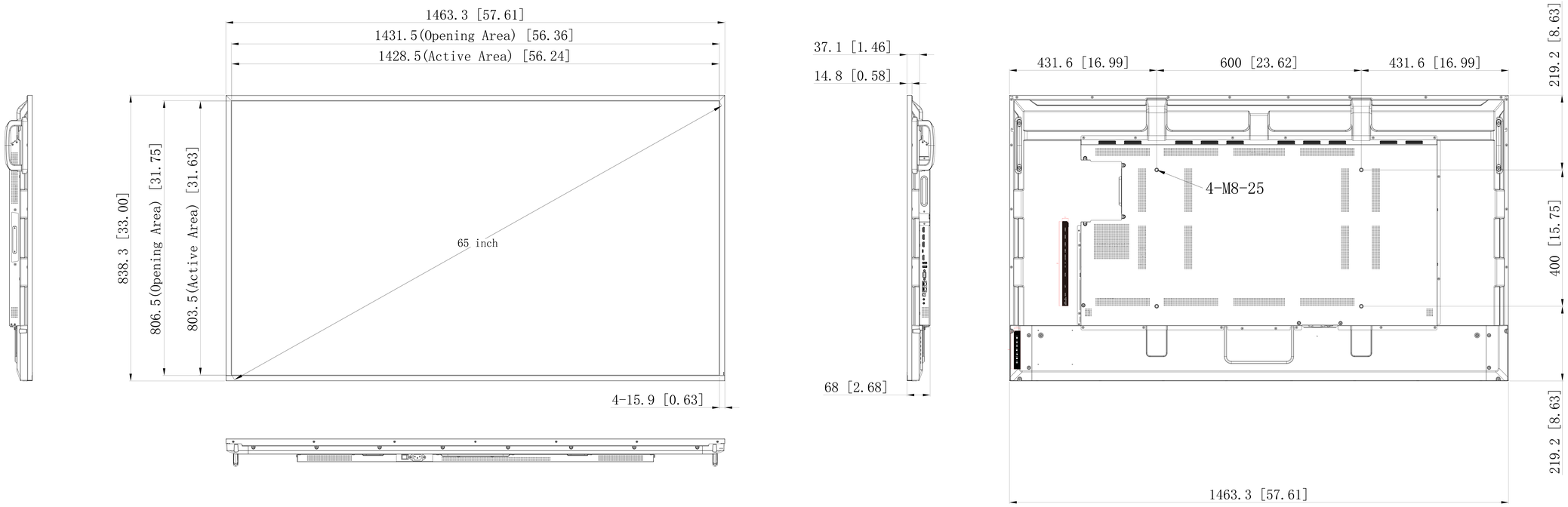

TOLERANCES (Unless Otherwise Stated)	
尺寸范围	公差
≤63	±0.10
63<x≤160	±0.15
160<x≤400	±0.20
400<x≤1000	±0.25
>1000	±0.3
Angle	±0.3°
本公差适用于钣金开模件	

Third Projection

View Sonic

Project NO.	CDE6531-1C	Unit	mm	NOTES
Part NO.	Six View Drawing	Scale	1:1	\
Part Name	\	Size	free	
Material	\	Pages	1/1	
Color NO.	\	APV		
Designer	\			