Yealink

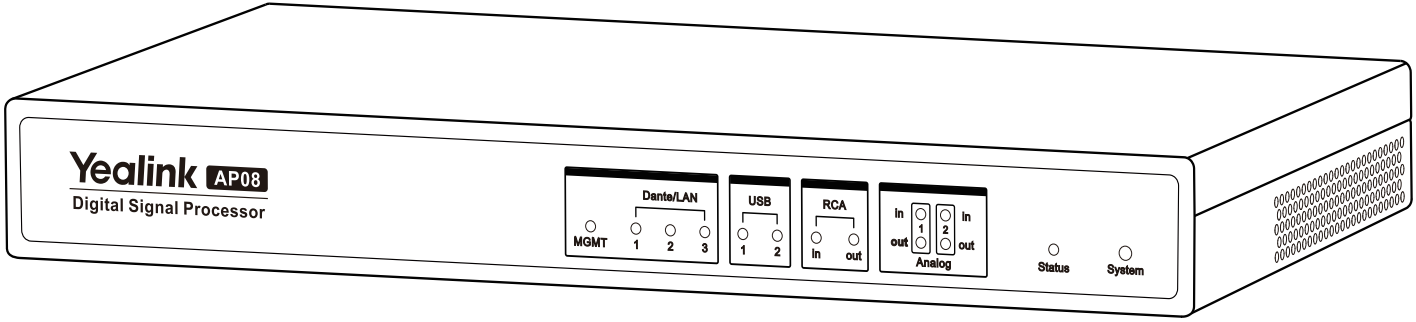

Digital Signal Processing AP08

Quick Start Guide

Package Contents

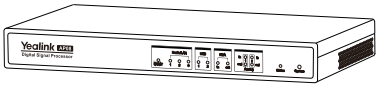

AP08

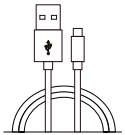

USB 3.0 (A - B) Cable (2.5m)

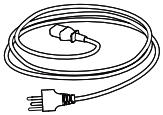

Power Adapter (3m)

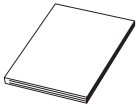

Quick Start Guide

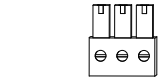

× 5

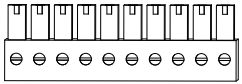

× 2

Male Phoenix Connector (Pitch 3.81 mm)

In a 19-Inch Rack

Under a Table/On a Wall

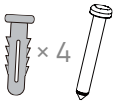

× 4 × 4

Expansion Nuts and Screws

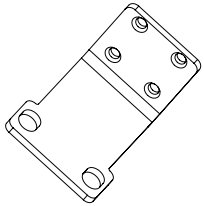

×2 ×8

Mounting Ears and Screws (4 screws pre-installed on AP08)

We recommend that you use the accessories provided or approved by Yealink. The use of unapproved third-party accessories may result in poor performance.

Installation

A. In a 19-Inch Rack (compliant with the IEC60297 Standard)

1. Remove the mounting ear screws from each side of AP08 (2 screws per side).

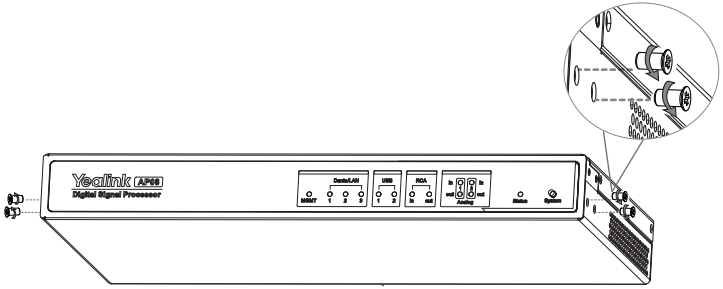

2. Install the mounting ears on both sides of the AP08.

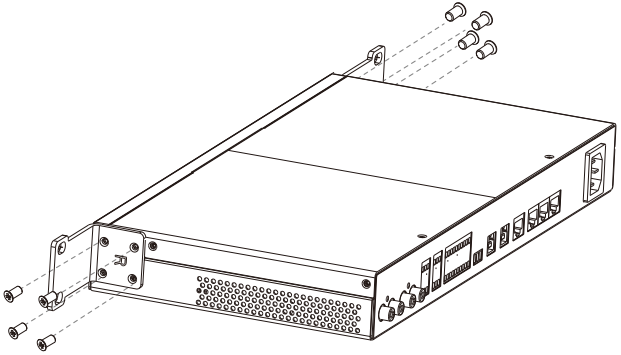

3. Push the AP08 into the rack, and fix it to the rack with screws (not included).

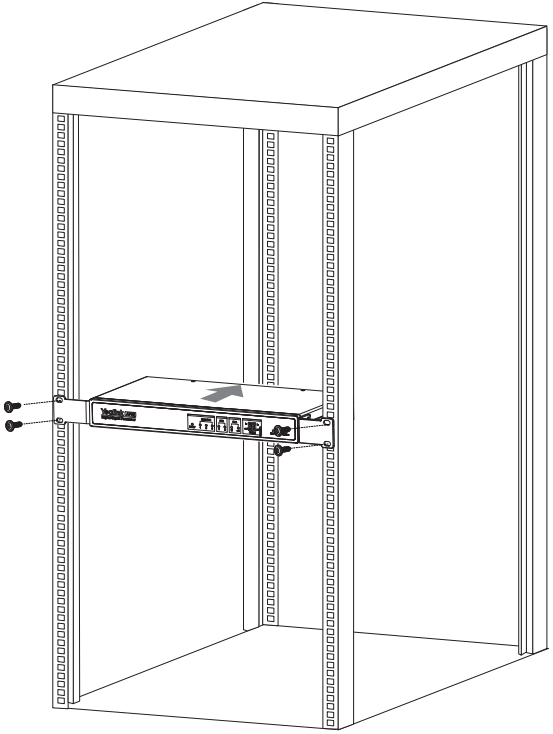

B. Under a Table or On a Wall

1. Remove the mounting ear screws from each side of AP08 (2 screws per side).
2. Install the mounting ears on both sides of the AP08.
3. Use the mounting ears to mark holes on the mounting surface.
4. Drill holes and insert the expansion nuts.
5. Fix the AP08 on the mounting surface with the expansion screws.

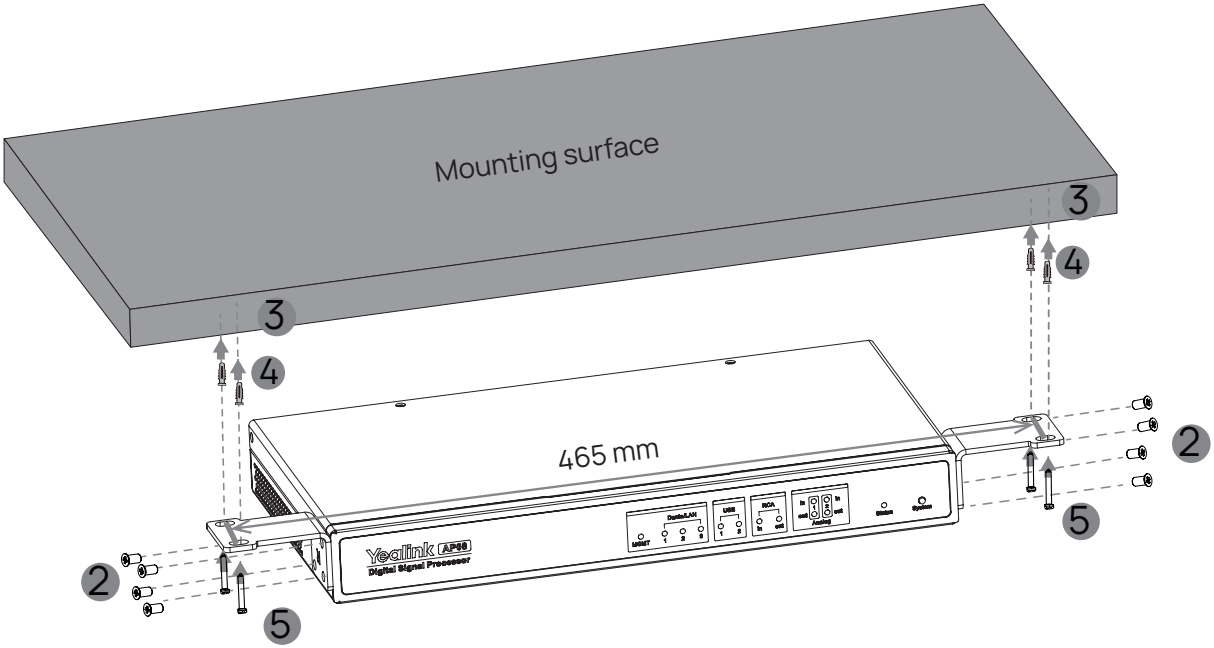

Front Panel Introduction (page 1 of 2)

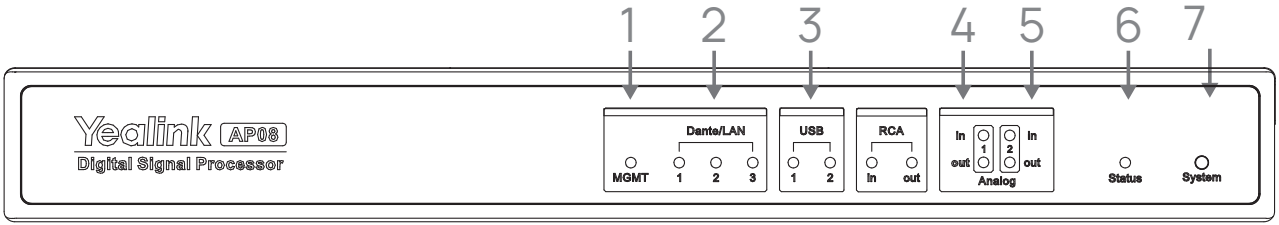

1	MGMT LED	• Solid green: Network connected/ transmitting data. • Off: Network disconnected. • Flashing red: - MGMT LED: Network error. - Dante/LAN LED: Dante module error.	4	RCA LED	• Solid green: Transmitting signal. • Off: No signal or weak signal level.
2	Dante/LAN LED		5	Analog LED	
3	USB LED	• Solid green: Devices connected. • Off: Devices not connected.	6	Status LED	See the next page.
			7	System Button	• Quickly press twice within 2 seconds to start Yealink Acoustic Adaptation. • Press and hold for 5 seconds to reset the device.

Front Panel Introduction (page 2 of 2)

Status LED

LED Indicators	Introduction
Solid orange	• Initializing • Rebooting
Off	Powered off
Solid green	In idle status
Flash orange slowly	AP08 is upgrading firmware
Flash red slowly	AP08 is in recovery mode
Flash red quickly	Power error
Flash red and green alternately	Searching devices

Rear Panel Introduction

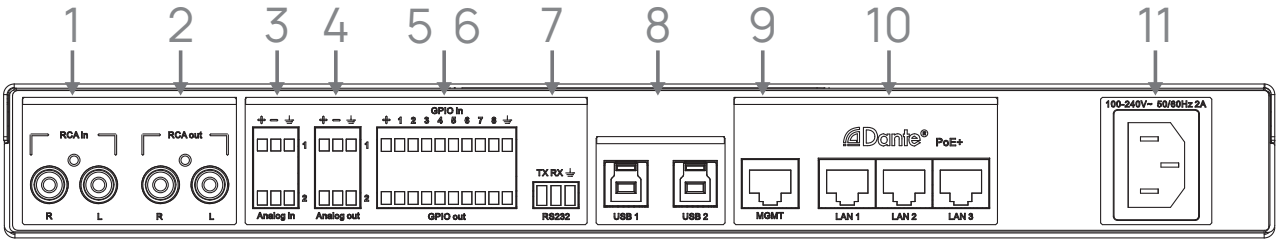

1	RCA in: 2 RCA inputs for unbalanced analog input.	7	RS-232: For device control.
2	RCA out: 2 RCA outputs for unbalanced analog output.	8	USB Type-B: 2 × USB 3.0 ports for device connectivity.
3	Analog in: 2 × 3-pin Phoenix connectors for balanced analog input; support 48V phantom power.	9	MGMT: For device control and Management.
4	Analog out: 2 × 3-pin Phoenix connectors for balanced analog output.	10	LAN : 3 × RJ-45 ports for Dante Network, with PoE+.
5	• GPIO in: 1-8 inputs, analog input or contact closure (up to 24V) with switchable 5V pull-up. • GPIO out: 1-8 outputs, open-drain output (up to 24V, 0.3A), default state +3.3V. • ⊕ +12VDC: 0.1A	11	Power: Universal power input (100–240 V, 50/60 Hz, 2A).
6			

* ⏚ GND: Earth ground.

Connection

Analog in/out Connector

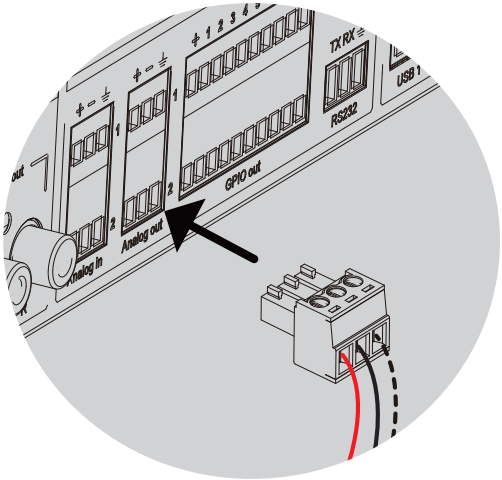

The lines are not included, please purchase separately.

Balanced

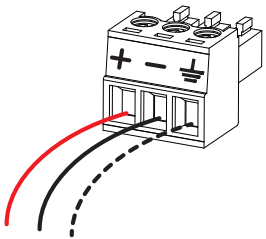

Unbalanced

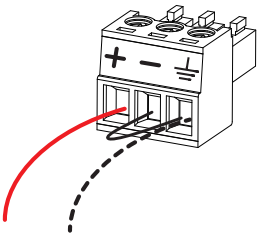

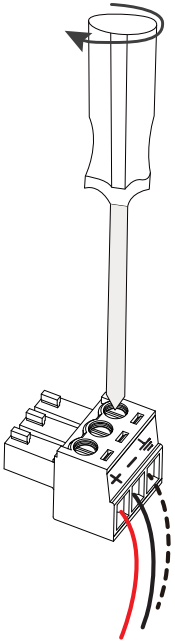

RS-232 Connector

The lines are not included, please purchase separately.

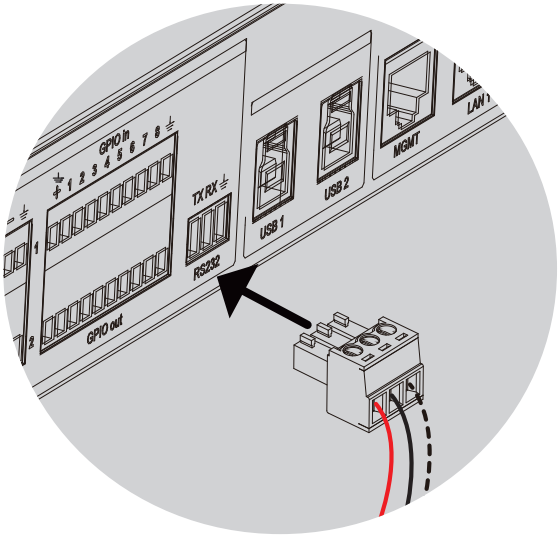

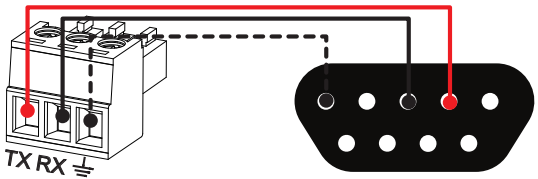

DB9 Female Connector

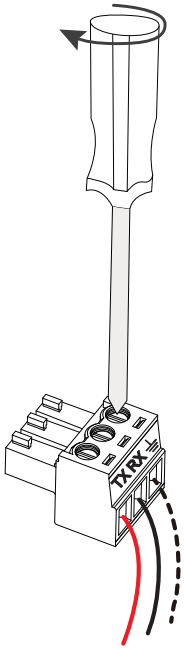

Regulatory Notices

Operating Ambient Temperatures

- Operating temperature: +14 to 113°F (-10 to +45°C)
- Relative humidity: 5% to 90%, noncondensing
- Storage temperature: -22 to +158°F (-30 to +70°C)

Warranty

Our product warranty is limited only to the unit itself, when used normally in accordance with the operating instructions and the system environment. We are not liable for damage or loss resulting from the use of this product, or for any claim from a third party. We are not liable for problems with Yealink device arising from the use of this product; we are not liable for financial damages, lost profits, claims from third parties, etc., arising from the use of this product.

DC symbol

⎓ is the DC voltage symbol.

Restriction of Hazardous Substances Directive (RoHS)

This device complies with the requirements of the EU RoHS Directive. Statements of compliance can be obtained by contacting support@yealink.com.

Safety Instructions

Save these instructions. Read these safety instructions before use!

The following basic safety precautions should always be followed to reduce risk of fire, electrical shock, and other personal injury.

⚠ Environmental Requirements

- Place the product on a stable, level and non-slip surface.
- Do not place the product close to heat sources, in direct sunlight or next to any house hold appliance with strong magnetic field or electromagnetic field, such as a microwave oven or a refrigerator.
- Do not allow the product to come into contact with water, dust and chemicals.
- Protect the product from aggressive liquids and vapors.
- Do not place the product on or near any inflammable or fire-vulnerable object, such as rubber-made materials.
- Do not install the product in rooms with high humidity, for example, in bathrooms, laundry rooms and wet basements.

⚠ Safety Notes During Operation

- Use only spare parts and accessories supplied or authorized by Yealink. The operation of non-authorized parts cannot be guaranteed.
- Do not place heavy objects on top of the handset or the base station in case of damage and deformation caused by the heavy load.
- Do not open the handset or the base station by yourself for repair purpose, which could expose you to high votages. Have all repairs carried out by authorized service personel.
- Do not let a child operate the product without guidance.
- Keep the small accessories contained in your product out of reach of small children in case of accidental swallowing.
- Before plugging or unplugging any cable, make sure that your hands are completely dry.
- Do not hold the handset up to your ear when speakphone is on or when the ringer is ringing as the volumn can be very loud, which may be harmful to your hearing.
- During a thunderstorm, stop using the product and disconnect it from the power supply to avoid lightning strike.
- If the product is left unused for a rather long time, disconnect the base station from the power supply and unplug the power adapter.
- When there is smoke emitted from the product, or some abnormal noise or smell, disconnect the product from the power supply, and unplug the power adapter immediately.
- Remove the electrical cord from an outlet by pulling gently on the power adapter, not by pulling the cord.

⚠ Notices of Cleaning

- Before cleaning the base station, stop using it and disconnect it from the power supply.
- Remove the battery before cleaning the handset to reduce risk of electric shock.
- Only clean your product with a piece of slightly moist and anti-static cloth.
- Keep the power plug clean and dry. Using a dirty or wet power plug may lead to electric shock or other perils.

⚠ ENVIRONMENTAL RECYCLING

Never dispose of the device with domestic waste

Ask your Town Council about how to dispose of it in an environmentally friendly way. The cardboard box, plastic packaging and player components may be recycled in accordance with prevailing recycling regulations in your country.

Always adhere to prevailing regulations

Those who fail to do so may be fined or prosecuted in accordance with the law. The crossed out garbage can that appears on the device means that when it has reached the end of its useful life, it should be taken to a special waste disposal center and treated separately to general urban waste.

Troubleshooting

The unit cannot supply power to Yealink device.

There is a bad connection with the plug.

1. Clean the plug with a dry cloth.
2. Connect it to another wall outlet.

The usage environment is out of operating temperature range.

1. Use in the operating temperature range.

The cable between the unit and the Yealink device is connected incorrectly.

1. Connect the cable correctly.

You cannot connect the cable properly.

1. You may have connected a wrong Yealink device.
2. Use the correct power supply.

Some dust, etc., may be in the port.

1. Clean the port.

Contact your dealer or authorized service facility for any further questions.

Contact Information

YEALINK NETWORK TECHNOLOGY CO.,LTD.
No.666 Hu'an Rd,Huli District Xiamen City, Fujian, P.R.C
YEALINK (EUROPE) NETWORK TECHNOLOGY B.V.
Sir Winston Churchilln 299 k, 2288DC Rijswijk
YEALINK (USA) NETWORK TECHNOLOGY CO., LTD.
999 Peachtree Street Suite 2300, Fulton, Atlanta, GA, 30309, USA
Made in China