Yealink

USB Camera

UVC30 Room

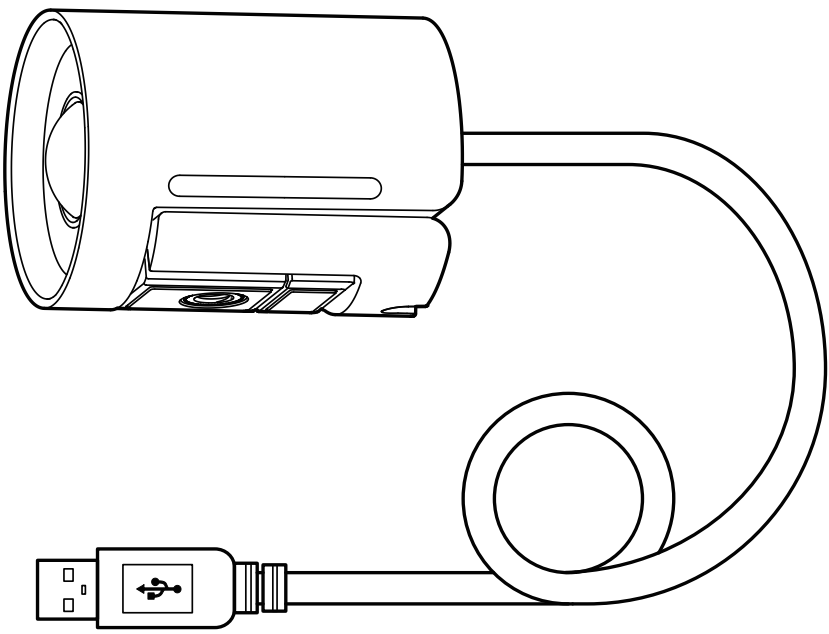

English | 简体中文

Quick Start Guide(V1.3)

Package Contents

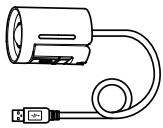

(3m,9.84ft)
USB (A)

UVC30 Room

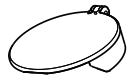

Camera Lens
Privacy Cover

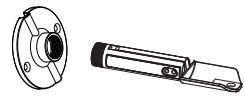

D76*L20mm

Mounting Bracket

WH-85*3.0

Screwdriver

× 2

T4*30mm

× 1

1/4”-20 UNC

× 2

ϕ6*30mm

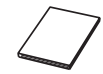

UVC30 Room Quick Start Guide

We recommend that you use the accessories provided or approved by Yealink. The use of unapproved third-party accessories may result in poor performance.

UVC30 Room Installation

- **Mount on top of a TV**

  Choose the following installation method when the thickness of the TV is between 1mm and 50mm.

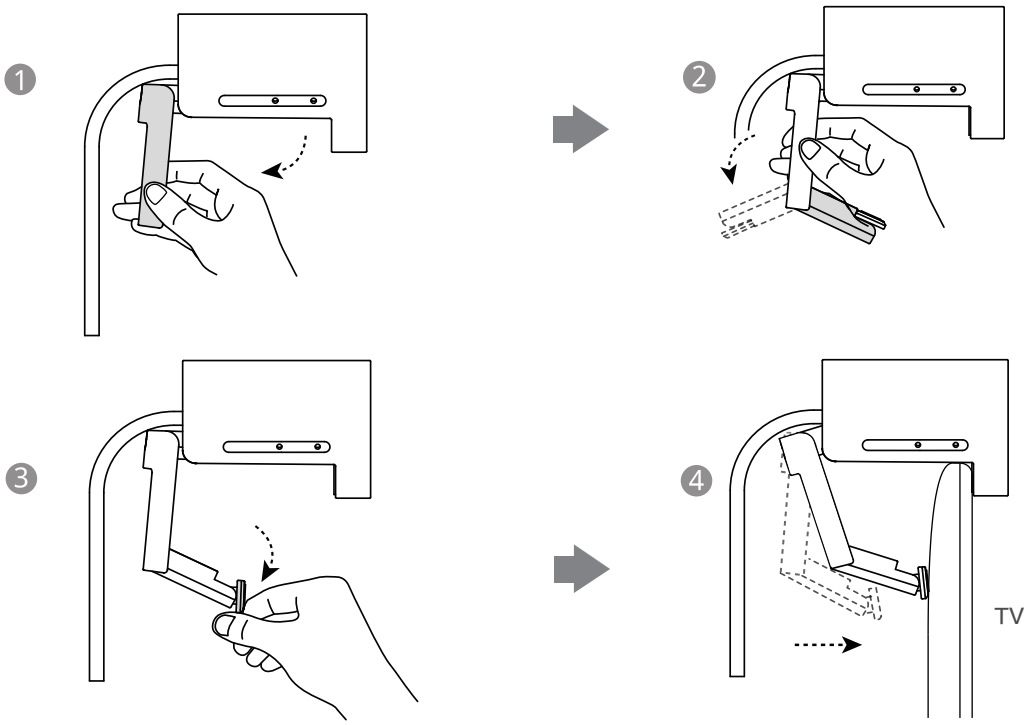

- **Mount on a Wall**

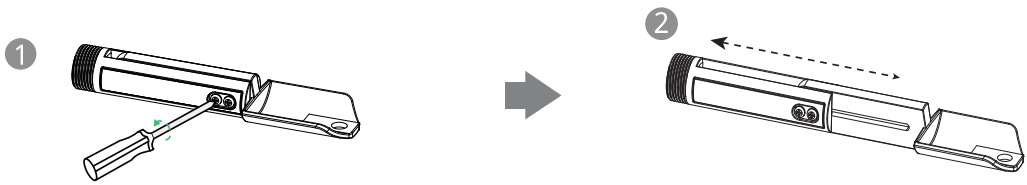

Adjust the bracket length according to the TV thickness.

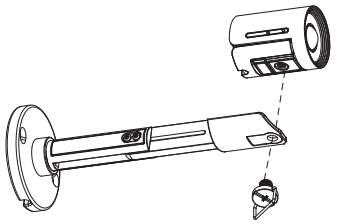

3

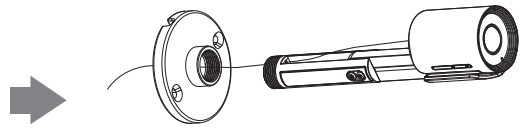

4

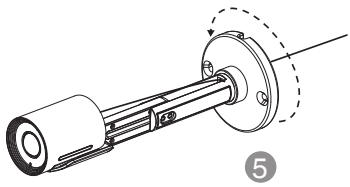

5

6

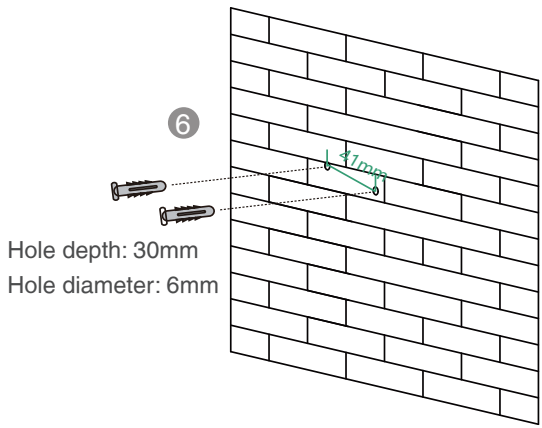

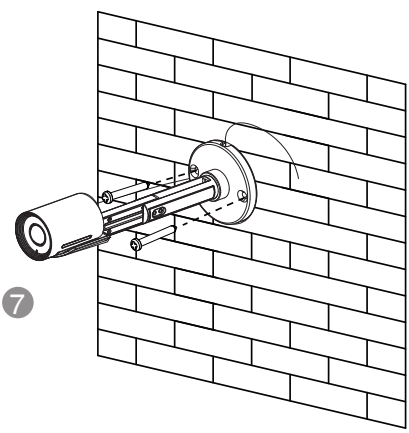

7

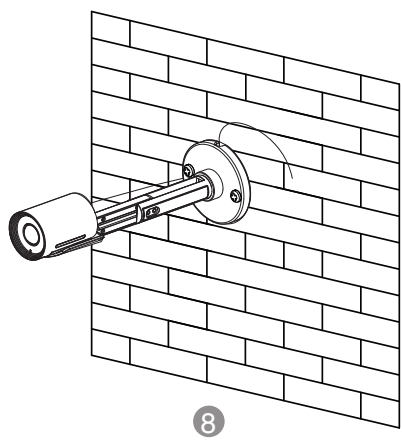

8

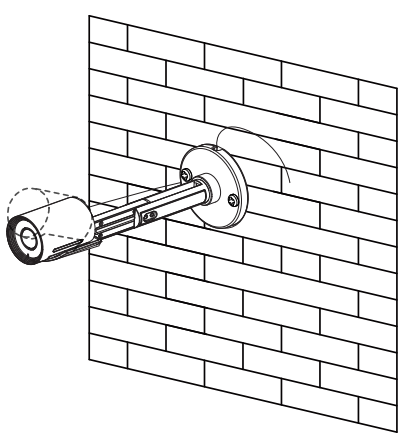

9

Adjust the camera angle.

- **Mount onto a TV Stand or a Tripod**

  You need to purchase a TV stand or a tripod separately.

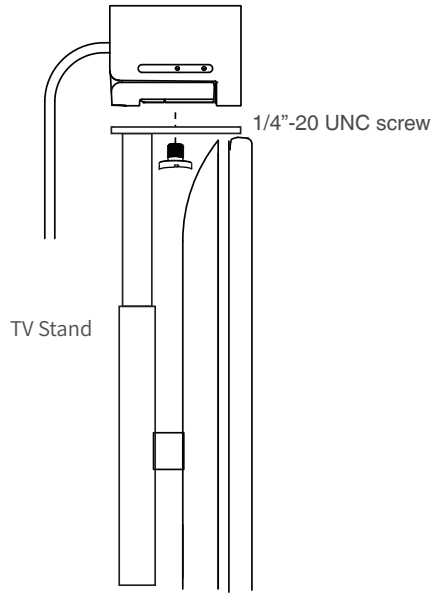

LED Indicator Instructions

LED indicators on the UVC30 Room:

LED Status	Description
Off	The UVC30 Room is not properly connected to the mini-PC or the UVC30 Room is inactive.
Flashing green	There is an incoming call in the Skype for Business/Teams meeting.
Solid green	The UVC30 Room is active.
Flashing orange	The UVC30 Room is upgrading firmware.
Flashing red	The UVC30 Room is in recovery mode and the firmware has not been upgraded.

Regulatory Notices

Operating Ambient Temperatures

- Operating temperature: +32 to 104°F (0 to 40°C)
- Relative humidity: 5% to 90%, noncondensing
- Storage temperature: -22 to +160°F (-30 to +70°C)

Warranty

Our product warranty is limited only to the unit itself, when used normally in accordance with the operating instructions and the system environment. We are not liable for damage or loss resulting from the use of this product, or for any claim from a third party. We are not liable for problems with Yealink device arising from the use of this product; we are not liable for financial damages, lost profits, claims from third parties, etc., arising from the use of this product.

Explanation of the symbols

- DC symbol

⎓ is the DC voltage symbol.

- WEEE Warning symbol

To avoid the potential effects on the environment and human health as a result of the presence of hazardous substances in electrical and electronic equipment, end users of electrical and electronic equipment should understand the meaning of the crossed-out wheeled bin symbol. Do not dispose of WEEE as unsorted municipal waste and have to collect such WEEE separately.

Restriction of Hazardous Substances Directive (RoHS)

All adapter devices comply with the requirements of the EU RoHS Directive. Statements of compliance can be obtained by contacting support@yealink.com.

Safety Instructions

Save these instructions. Read these safety instructions before use!

⚠ General Requirements

- Before you install and use the device, read the safety instructions carefully and observe the situation during operation.
- During the process of storage, transportation, and operation, please always keep the device dry and clean, avoid collision and crash.
- Please attempt not to dismantle the device by yourself. In case of any discrepancy, please contact the appointed maintenance center for repair.
- Please refer to the relevant laws and statutes while using the device. Legal rights of others should be respected as well.

⚠ Environmental Requirements

- Place the device at a well-ventilated place. Do not expose the device under direct sunlight.
- Keep the device dry and free of dusts.
- Do not place the device on or near any inflammable or fire-vulnerable object, such as rubber-made materials.
- Keep the device away from any heat source or bare fire, such as a candle or an electric heater.

⚠ Operating Requirements

- Do not let a child operate the device without guidance.
- Do not let a child play with the device or any accessory in case of accidental swallowing.
- Please use the accessories provided or authorized by the manufacturer only.
- The power supply of the device shall meet the requirements of the input voltage of the device. Please use the provided surge protection power socket only.
- Before plugging or unplugging any cable, make sure that your hands are completely dry.
- Do not spill liquid of any kind on the product or use the equipment near water, for example, near a bathtub, washbowl, kitchen sink, wet basement or near a swimming pool.
- During a thunderstorm, stop using the device and disconnect it from the power supply. Unplug the power plug and the Asymmetric Digital Subscriber Line (ADSL) twisted pair (the radio frequency cable) to avoid lightning strike.
- If the device is left unused for a rather long time, disconnect it from the power supply and unplug the power plug.
- When there is smoke emitted from the device, or some abnormal noise or smell, disconnect the device from the power supply, and unplug the power plug immediately.
- Contact the specified maintenance center for repair.
- Do not insert any object into equipment slots that is not part of the product or auxiliary product.
- Before connecting a cable, connect the grounding cable of the device first. Do not disconnect the grounding cable until you disconnect all other cables.

⚠ Cleaning Requirements

- Before cleaning the device, disconnect it from the power supply.
- Use a piece of soft, dry and anti-static cloth to clean the device.
- Keep the power plug clean and dry.

Troubleshooting

The unit cannot supply power to device other than Yealink device.
There is a bad connection with the plug.
1. Clean the plug with a dry cloth.
2. Connect it to another wall outlet.
The usage environment is out of operating temperature range.
1. Use in the operating temperature range.
The cable between the unit and the Yealink device is connected incorrectly.
1. Connect the cable correctly.
You cannot connect the cable properly.
1. You may have connected a wrong Yealink device.
2. Use the correct power supply.
Some dust, etc., may be in the port.
1. Clean the port.
Contact your dealer or authorized service facility for any further questions.

FCC Statement

This device complies with part 15 of the FCC Rules. Operation is subject to the following
two conditions: (1) this device may not cause harmful interference, and (2) this device must accept any interference received, including interference that may cause undesired operation.
Any Changes or modifications not expressly approved by the party responsible for compliance could void the user's authority to operate the equipment.

IC Statement

This device complies with Industry Canada's licence-exempt RSSs. Operation is subject to the following two conditions:
(1) this device may not cause interference; and
(2) this device must accept any interference, including interference that may cause undesired operation of the device. CAN ICES-3(B)
Le présent appareil est conforme aux CNR d'Industrie Canada applicables aux appareils radio exempts de licence. L'exploitation est autorisée aux deux conditions suivantes :
(1) l'appareil ne doit pas produire de brouillage;
(2) l'utilisateur de l'appareil doit accepter tout brouillage radioélectrique subi, même si le brouillage est susceptible d'en compromettre le fonctionnement.NMB-3(B)

Contact Information

YEALINK NETWORK TECHNOLOGY CO.,LTD.
309, 3rd Floor, No.16, Yun Ding North Road, Huli District, Xiamen City, Fujian, P.R.C
YEALINK (EUROPE) NETWORK TECHNOLOGY B.V.
Strawinskylaan 3127, Atrium Building, 8th floor, 1077ZX Amsterdam, The Netherlands
YEALINK (USA) NETWORK TECHNOLOGY CO., LTD.
999 Peachtree Street Suite 2300, Fulton, Atlanta, GA, 30309, USA
Made in China

About Yealink

Yealink is a global leading provider of enterprise communication and collaboration solutions, offering video conferencing service to worldwide enterprises. Focusing on research and development, Yealink also insists on innovation and creation. With the outstanding technical patents of cloud computing, audio, video and image processing technology, Yealink has built up a panoramic collaboration solution of audio and video conferencing by merging its cloud services with a series of endpoints products. As one of the best providers in more than 140 countries and regions including the US, the UK and Australia, Yealink ranks No.1 in the global market share of SIP phones shipments.

Technical Support

Visit Yealink WIKI (http://support.yealink.com/) for the latest firmware, guides, FAQ, Product documents, and more. For better service, we sincerely recommend you to use Yealink Ticketing system (https://ticket.yealink.com) to submit all your technical issues.

430104001318

Web: www.yealink.com

Copyright©2020 YEALINK(XIAMEN) NETWORK TECHNOLOGY CO.,LTD.All rights reserved.