Yealink

RoomPanel

Quick Start Guide (V1.4)

EN / DE / FR / ES

Table of Contents

English.....1
Deutsch.....11
Français.....21
Español.....31

1 Package Contents

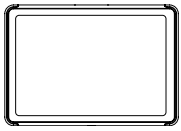

RoomPanel

USB-C Port Protective Cover

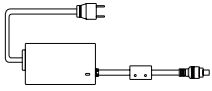

(2.5m, 8.20ft)
Power Adapter (12V/1.25A)

(WH-85*3.0mm)
Screwdriver

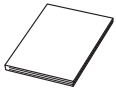

Quick Start Guide

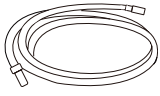

Power Extension Cable (Optional)

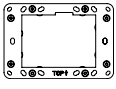

Metal Bracket

20° Mounting Bracket

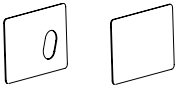

(Optional × 1) (Default × 1)
3M Adhesive Tape × 2

0° Mounting Bracket

Security Latch

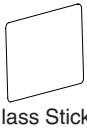

Glass Sticker

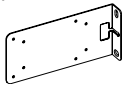

Mullion Mount Bracket

Mounting Bracket and Accessory Kit

× 6

6-32 x 3/4 in
(For mounting U.S. electrical box)

× 4

M3.5 x 25mm
(For mounting U.K. electrical box)

× 6

M3 x 6mm
(For mounting metal bracket)

× 6

Φ6 × 30mm
(For mounting bracket)

× 6

T4 x 30mm
(For mounting bracket)

× 6

M4 x 5mm
(Fix the mullion mount Bracket and the wall bracket)

Screw Kit

2 Hardware Component Instructions

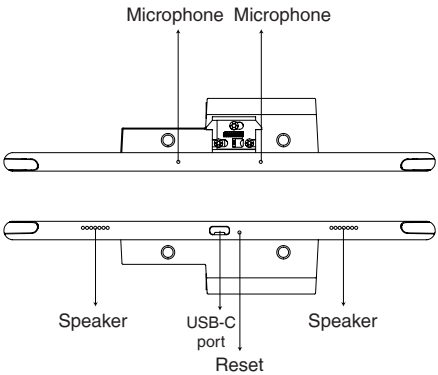

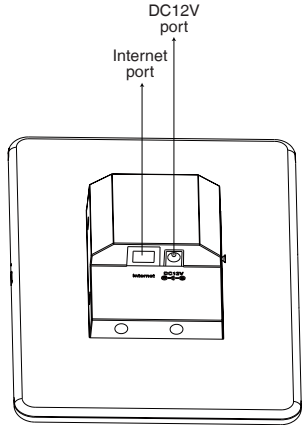

3 Connection

① DC Power Option:

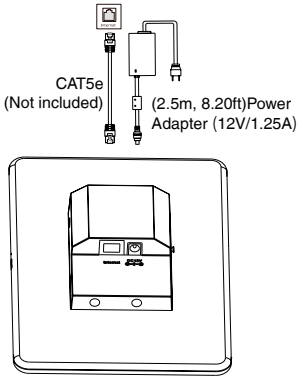

② PoE (Power over Ethernet) Option:

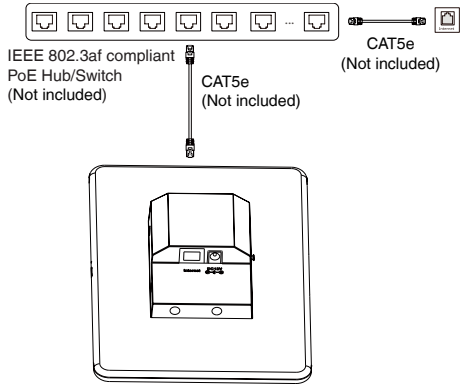

Note: The device supports the wireless network, and it does not need to use the power adapter when using option 2.

4 Installation

Option 1: Mount into the Electrical Box

The RoomPanel installs over a standard 2-gang U.S.electrical box.

Step 1: Install the Metal Bracket

Attach the metal bracket to the electrical box (as shown in the following illustrations).

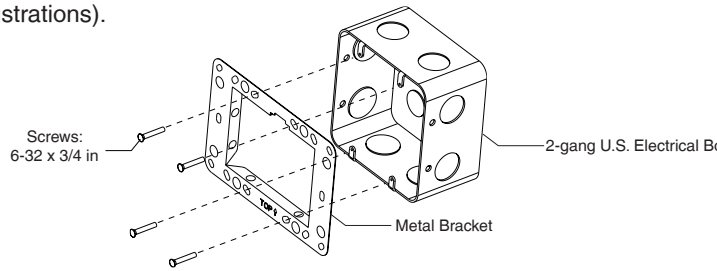

Keep the TOP ⇧ facing up.

Step 2: Install the Security Latch (Optional)

Install the security latch to the RoomPanel so that it cannot be easily removed from the mounting bracket after installation.

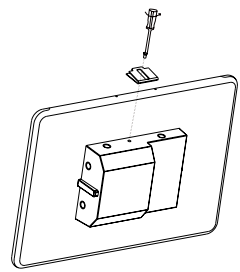

Step 3: Connect the Cable and Install the RoomPanel

Push the RoomPanel gently into the metal bracket.

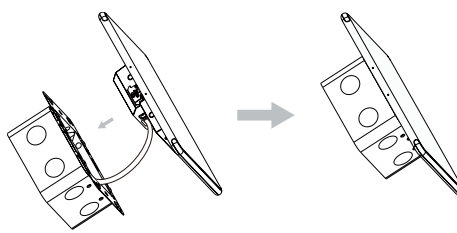

Option2: Mount on the Wall

The recommended installation height is between 40 inches to 60 inches (ADA consideration:20 inches to 48 inches).This guide mainly takes 0° Mounting Bracket as an example for reference.

Step 1: Install the Mounting Bracket to the Wall

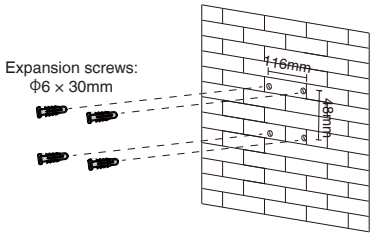

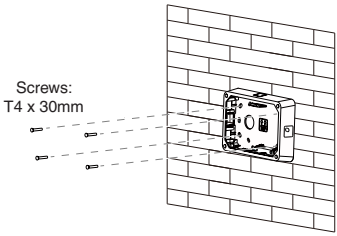

Keep the TOP facing up.

Step 2: Route the Ethernet Cable

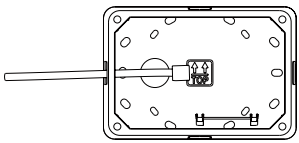

Option 1

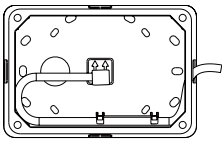

Option 2

Step 3: Install the Metal Bracket to the Mounting Bracket

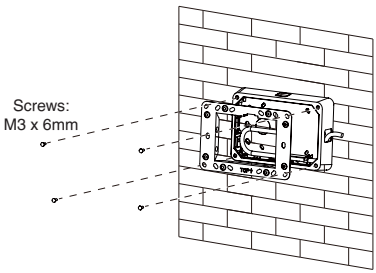

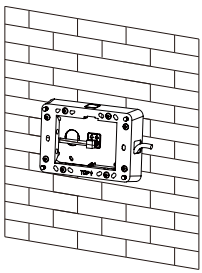

Keep the TOP ⇧ facing up.

Step 4: Install the Security Latch (Optional)

Install the security latch to the RoomPanel so that it cannot be easily removed from the mounting bracket after installation.

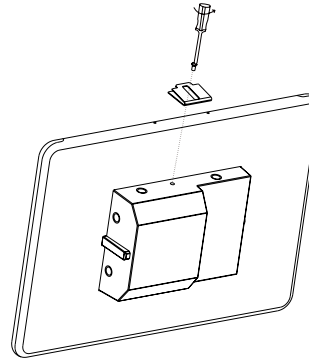

Step 5: Connect the Cable and Install the RoomPanel

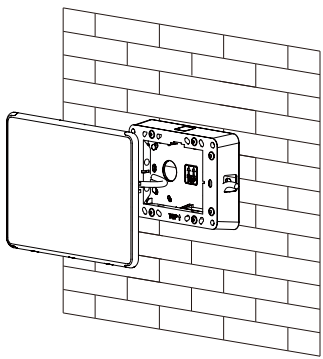

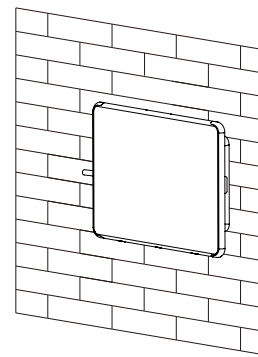

Option 3: Mount on the Glass

Step 1: Glue the Mounting Bracket to the Glass

Choose **A** 3M tape if you route the cable in the wall, otherwise choose **B**.

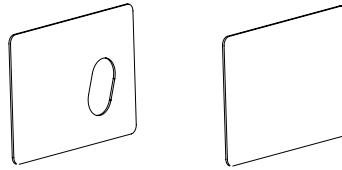

A **B**

Note:

1. **Clean** the surface of the glass before gluing the 3M tape.
2. **Press** the 3M tape hard to help improve bond strength between the glass and the mounting bracket.
3. **Wait** 1 hour after gluing the mounting bracket and install the RoomPanel next.

This guide mainly takes **A** 3M tape as an example for reference.

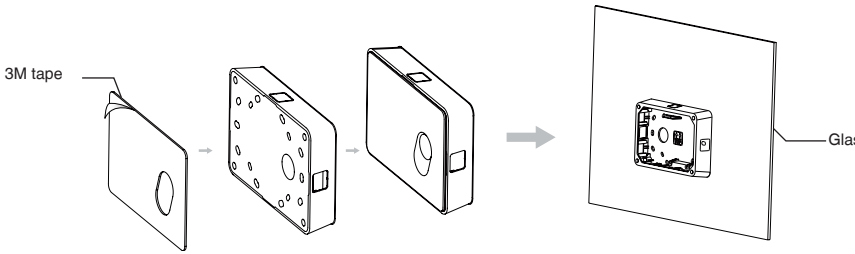

Keep the TOP facing up.

Step 2: Route the Ethernet Cable

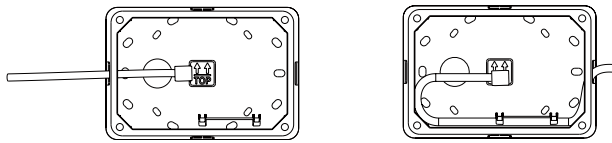

Option 1 Option 2

Step 3: Install the Metal Bracket to the Mounting Bracket

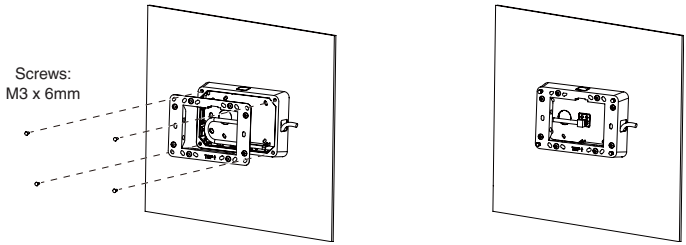

Keep the TOP ⇧ facing up.

Step 4: Install the Security Latch (Optional)

Install the security latch to the RoomPanel so that it cannot be easily removed from the mounting bracket after installation.

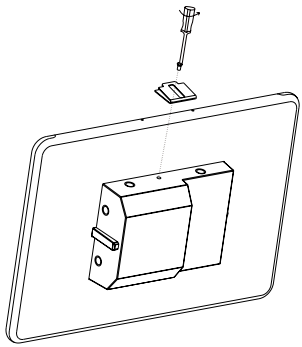

Step 5: Connect the Cable and Install the RoomPanel

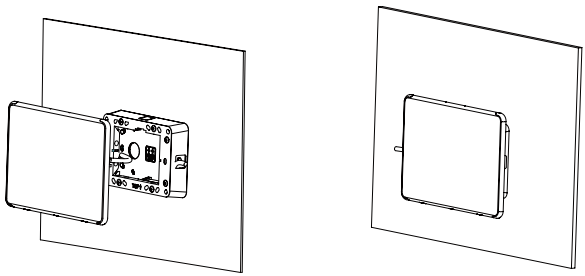

Step 6: Glue the glass sticker on the back of the glass (Optional)

You can glue the glass sticker to the back of glass which the RoomPanel installed to maintain the aesthetics.

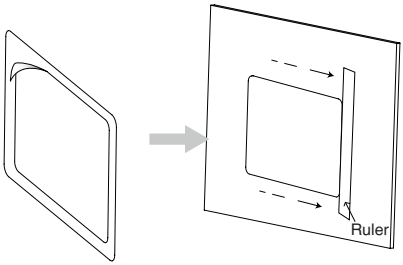

Note:
You can press the glass sticker with a ruler, and glue it while pressing to reduce the generation of air bubbles.

Option 4: Mullion Mounting

Step 1: Install the mullion mount bracket

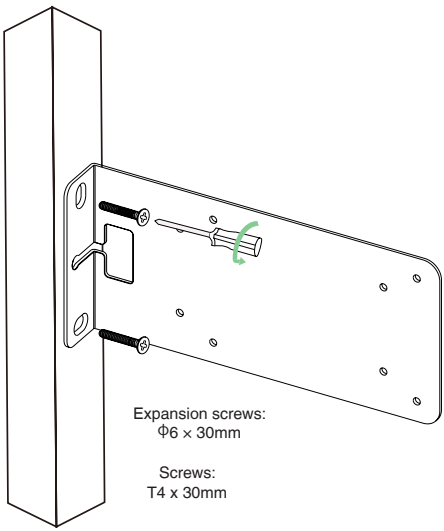

Step 2: Install the Mounting Bracket to the mullion mount bracket

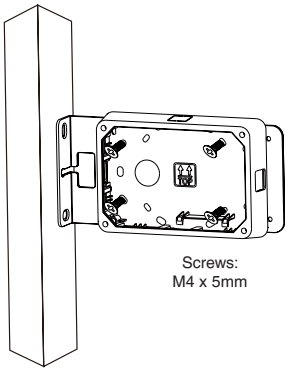

Screws:
M4 x 5mm

Keep the TOP facing up.

Step 3: Route the Ethernet Cable

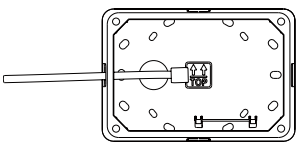

Option 1

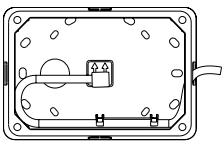

Option 2

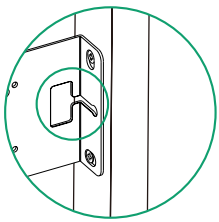

You can route the cable through this hole.

Step 4: Install the Metal Bracket to the Mounting Bracket

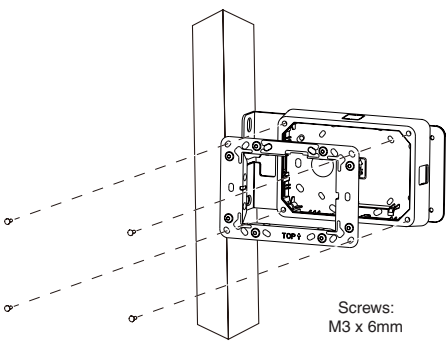

Screws:
M3 x 6mm

Keep the TOP facing up.

Step 5: Install the Security Latch (Optional)

Install the security latch to the RoomPanel so that it cannot be easily removed from the mounting bracket after installation.

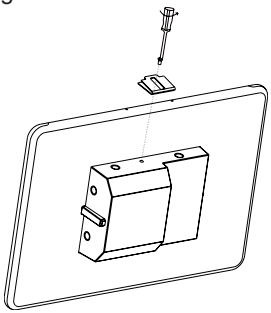

Step 6: Connect the Cable and Install the RoomPanel

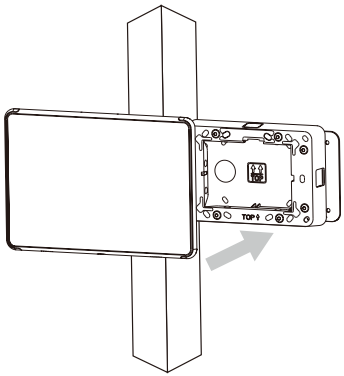

5 Remove the RoomPanel

1. If the security latch has not be installed you can directly pull the RoomPanel to disengage the mounting bracket.
2. If the security latch has be installed:

Use the release key to push down on the security bracket release tabs as shown in the following while pulling the touch screen away from the mounting bracket.

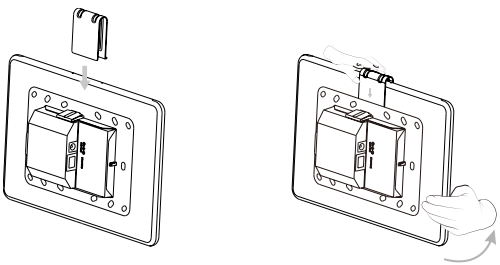

Regulatory Notices

Operating Ambient Temperatures

- Operating temperature: +32 to 113°F (0 to 45°C)
- Relative humidity: 5% to 90%, noncondensing
- Storage temperature: -22 to +158°F (-30 to +70°C)

Warranty

Our product warranty is limited only to the unit itself, when used normally in accordance with the operating instructions and the system environment. We are not liable for damage or loss resulting from the use of this product, or for any claim from a third party. We are not liable for problems with Yealink device arising from the use of this product; we are not liable for financial damages, lost profits, claims from third parties, etc., arising from the use of this product.

DC symbol

⎓ is the DC voltage symbol.

Restriction of Hazardous Substances Directive (RoHS)

This device complies with the requirements of the EU RoHS Directive. Statements of compliance can be obtained by contacting support@yealink.com.

Safety Instructions

Save these instructions. Read these safety instructions before use!

The following basic safety precautions should always be followed to reduce risk of fire, electrical shock, and other personal injury.

General Requirements

- Before you install and use the device, read the safety instructions carefully and observe the situation during operation.
- the main plug is used as disconnect device, the socket-outlet should be near the Switching Adapter and it should be easily accessible.
- During the process of storage, transportation, and operation, please always keep the device dry and clean.
- During the process of storage, transportation, and operation, please avoid collision and crash of the device.
- Please attempt not to dismantle the device by yourself. In case of any discrepancy, please contact the appointed maintenance center for repair.
- Without prior written consent, no organization or individual is permitted to make any change to the structure or the safety design of the device. Yealink is under no circumstance liable to consequences or legal issues caused by such changes.
- Please refer to the relevant laws and statutes while using the device. Legal rights of others should be respected as well.

Environmental Requirements

- Do not cover ventilation openings, this equipment is not intended to be used on soft support.
- The marking information is located at the exterior of the bottomPlace the device at a well-ventilated place. Do not expose the device under direct sunlight.
- Keep the device dry and free of dusts.
- Place the device on a stable and level platform.
- Please place no heavy objects on the device in case of damageand deformation caused by the heavy load.
- Keep at least 10 cm between the device and the closest object for heat dissipation.
- Do not place the device on or near any inflammable or fire-vulnerable object, such as rubber-made materials.
- Keep the device away from any heat source or bare fire, such as a candle or an electric heater.
- Keep the device away from any household appliance with strong magnetic field or electromagnetic field, such as a microwave oven or a refrigerator.

Operating Requirements

- Do not let a child operate the device without guidance.
- Do not let a child play with the device or any accessory in case of accidental swallowing.
- Please use the accessories provided or authorized by the manufacturer only.
- The power supply of the device shall meet the requirements of the input voltage of the device. Pleaseusethe provided surge protection power socket only.
- Before plugging or unplugging any cable, make sure that your hands are completely dry.
- Do not spill liquid of any kind on the product or use the equipment near water, for example, near a bathtub, washbowl, kitchen sink, wet basement or near a swimming pool.
- Do not tread on, pull, or over-bend any cable in case of malfunction of the device.
- During a thunderstorm, stop using the device and disconnect it from the power supply. Unplug the power plug and the Asymmetric Digital Subscriber Line (ADSL) twisted pair (the radio frequency cable) to avoid lightning strike.
- If the device is left unused for a rather long time, disconnect it from the power supply and unplug the power plug.
- When there is smoke emitted from the device, or some abnormal noise or smell, disconnect the device from the power supply, and unplug the power plug immediately. Contact the specified maintenance center for repair.
- Do not insert any object into equipment slots that is not part of the product or auxiliary product.
- Before connecting a cable, connect the grounding cable of the device first. Do not disconnect the grounding cable until you disconnect all other cables.

Cleaning Requirements

- Before cleaning the device, stop using it and disconnect it from the power supply.
- Use a piece of soft, dry and anti-static cloth to clean the device.
- Keep the power plug clean and dry. Using a dirty or wet power plug may lead to electric shock or other perils.

ENVIRONMENTAL RECYCLING

Never dispose of the device with domestic waste

Ask your Town Council about how to dispose of it in an environmentally friendly way. The cardboarc box, plastic packaging and player components may be recycled in accordance with prevailing recycling regulations in your country.

Always adhere to prevailing regulations

Those who fail to do so may be fined or prosecuted in accordance with the law. The crossed out garbage can that appears on the device means that when it has reached the end of its useful life, it should be taken to a special waste disposal centre and treated separately to general urban waste.

EU Regulatory Information

Support Frequency Bands and Power:
NFC 13.56MHz <42dBuA/m @10m
Bluetooth 2.4GHz< 20 dBm
WLAN 2.4 GHz < 20 dBm;
WLAN 5150-5250 MHz < 23 dBm;
WLAN 5250-5350 MHz < 20 dBm;
WLAN 5470-5725 MHz < 27 dBm;
WLAN 5745-5825 MHz <14 dBm;

AT	BE	CY	CZ	DK	EE	FI
FR	DE	EL	HU	IE	IT	LV
LT	LU	MT	NL	PL	PT	SK
SI	ES	SE	UK	BG	RO	HR

In all EU member states, operation of 5150 -5250 MHz is restricted to indoor use only.

Troubleshooting

The unit cannot supply power to Yealink device.

There is a bad connection with the plug.

1. Clean the plug with a dry cloth.
2. Connect it to another wall outlet.

The usage environment is out of operating temperature range.

1. Use in the operating temperature range.

The cable between the unit and the Yealink device is connected incorrectly.

1. Connect the cable correctly.

You cannot connect the cable properly.

1. You may have connected a wrong Yealink device.
2. Use the correct power supply.

Some dust, etc., may be in the port.

1. Clean the port.

Contact your dealer or authorized service facility for any further questions.

Contact Information

YEALINK NETWORK TECHNOLOGY CO.,LTD.
No.666 Hu'an Rd,Huli District Xiamen City, Fujian, P.R.C
YEALINK (EUROPE) NETWORK TECHNOLOGY B.V.
Sir Winston Churchilln 299 k, 2288DC Rijswijk
YEALINK (USA) NETWORK TECHNOLOGY CO., LTD.
999 Peachtree Street Suite 2300, Fulton, Atlanta, GA, 30309, USA
Made in China